FläktGroup

MultiMAXX® HS

DATA & FACTS

Dear Customer,

This catalog provides you with assistance in selecting the FläktGroup MultiMAXX HS that best fits your needs and wishes for special applications in hygienic areas or in aggressive environments. You can choose HVAC equipment in stainless steel design and determine the necessary order code for your FläktGroup MultiMAXX HS.

The wide variety: The current catalog also contains important instructions for consultants, plant engineers and operators!

There are technical exclusions to which we refer in the descriptive Part 1, or which are inadmissible due to the conditions of use.

The catalogue is composed of four main sections:

Part 1 **Unit description**
This section provides ample data on all unit components.

Part 2 **Unit samples**
are used to demonstrate our know-how in most common applications with FläktGroup MultiMAXX HS units. Typical and possible combinations of components are summarized in the selection table. Options and combinations, that are not feasible from the technical point of view, are not considered by the current document.

Part 3 **Unit data**
specifies most essential technical information for the FläktGroup Multi*MAXX* HS HVAC equipment. Dimensions, sizes and weight are summarized in this section as well.

Part 4 **Regulation system**
Once you have decided on the unit, you can find data on possible regulation variants in Part 4 and then make your selection.

Unit code The entire unit code (Fig. 1-1) specifies the unit in its variations. As with other FläktGroup products, the unit code contains all details necessary for ordering, subsequent extension of the unit or provision of spare parts.

Accessory items code Accessory items have an individual type code (Fig. 1-2) and are to be added to the main unit code.

Controls code Controls components are also provided with a separate type code (Fig. 1-2). The final selectable control system is explained in detail in the unit description.

The position of medium and coil connections (position 8 in unit code), connection type (position 9) and the design of heat exchangers (position 13) are covered in the **unit code** (Fig. 1-1) - and then you're done.

If you need assistance, our trained sales staff would be glad to help you in the selection and layout of the unit using Aid@ design software, which can also provide complete technical data and specification texts.

Fig. 1-1 Unit Code

H S 1 2 . U W E R A B . F K E

Model size
1 = Model size 1
2 = Model size 2
3 = Model size 3
4 = Model size 4

Capacity stage
1 = Capacity stage 1
2 = Capacity stage 2
3 = Capacity stage 3

Air-flow function
U = Recirculating-air unit
M = Mixed-air unit

Medium function
S = Only heating/steam
W = Only heating/PWW, PHW

Heat exchanger
X = Fully galvanized, elliptic Finned tube 1.6 MPa - fin spacing 3 mm
Y = Fully galvanized, elliptic Finned tube 1.6 MPa - fin spacing 6 mm
E = Stainless steel, circular finned pipe 1.6 MPa - fin spacing 2.8 mm

Coil connection (front view)
O = From top - **only for steel HE**
R = from right
L = from left

Heat exchanger connection
A = External screw thread
O = Without screw thread connection

Outlet
Z = Basic outlet ceiling, two side
V = Four sides, ceiling
A = Outlet nozzle, ceiling
T = Gate nozzle
P = Profile ceiling / wall
B = Basis - wall
K = Terminating flange, pressure side
O = Without outlet, (design panel not mountable)

Motor/speeds
F = 3 ~ 400 V 2-speed - high speed range wide-blade fan

Electric equipment
K = Terminal box
S = Fan isolator
R = FläktGroup MATRIX

Execution
E = Casing in industrial design, stainless steel

Fig. 1-2 Controls Code

I 0 . 0 0 1 . G A

Controller type
0 = Terminal box
2 = MATRIX 2000
3 = MATRIX 3000
4 = MATRIX 4000

Controller package no.
1-999 = Paketnr. 001-999

Control panel
IP54; incl. room sensor 903454
G = MATRIX OP21I
I = MATRIX OP31I
K = MATRIX OP44I
L = MATRIX OP50I
M = MATRIX OP51I
N = MATRIX.IR
Z = without control panel

Unit type
A = Master unit with enclosed control panel
C = Master unit without control panel
D = Slave unit without control panel

or

MC 4 M 2AC 0KF

Type series
U = Recirculation air
M = Mixed air

Electric motor type
AC motor
2AC = 2-speed, 400 V AC, 50 Hz

Additional control functions
Recirculation air
000 = without additional functions
00F = LED display of filter contamination
Mixed air
0KF = Mixed-air module - actuator 230 V, ON/OFF and LED display of filter contamination

Fig. 1-3 Accessories Code

Z H # . # # # #

Model size
1 = Model size 1
2 = Model size 2
3 = Model size 3
4 = Model size 4

Air-intake modules
20 = Mixed-air module, type 1
21 = Mixed-air module, type 2
23 = Outside air blocking damper
25 = Flexible connection
26 = Rectangular duct 150
27 = Rectangular duct 1000
28 = Duct connecting bend 90°, symmetrical
29 = Duct connecting bend 90°, asymmetrical
31 = Wall air-intake hood, painted
32 = Weather protection grilles
34 = Duct through slanted roof
35 = Roof air-intake hood
36 = Bag-filter module
49 = Roof duct with flat roof-duct base
51 = Frame for wall connection
52 = Flange (for recirculating-air units)

Additional modules and suspensions
53 = Compact C Wall
55 = Modular (for wall mounting)
56 = Ceiling suspension

Material/Design
0 = Galvanized
1 = Stainless steel / plastic

Actuators for louvers and mixed-air modules
0 = Actuator on site
1 = manual adjustment
2 = Actuator 230 V, open/close

If required, filter insert/electrical equipment
0 = None
2 = G2/without differential pressure switch
4 = G4/without differential pressure switch
5 = G2/ with differential pressure switch
7 = G4/ with differential pressure switch

Model 55 Modular suspension with types

0	=	without accessories	7	=	25 (or 26)+23+51
1	=	25 (or 26)+20+51	8	=	25 (or 26)+36+23+51
2	=	25 (or 26)+36+20+51	9	=	25 (or 26)+37+23+51
3	=	25 (or 26)+37+20+51	A	=	25 (or 26)+36
4	=	25 (or 26)+21+29+51	C	=	25 (or 26)+28 (+49...)
5	=	25 (or 26)+36+21+29+51	W	=	without accessories for units with vertical outlet
6	=	25 (or 26)+37+21+29+51			

Configuration 56 ceiling suspension
0 = Installation without threaded rod
1 = Kit with threaded rod 1 m
2 = Kit with threaded rod 2 m
3 = Kit with threaded rod 3 m

Fig. 1: Type code

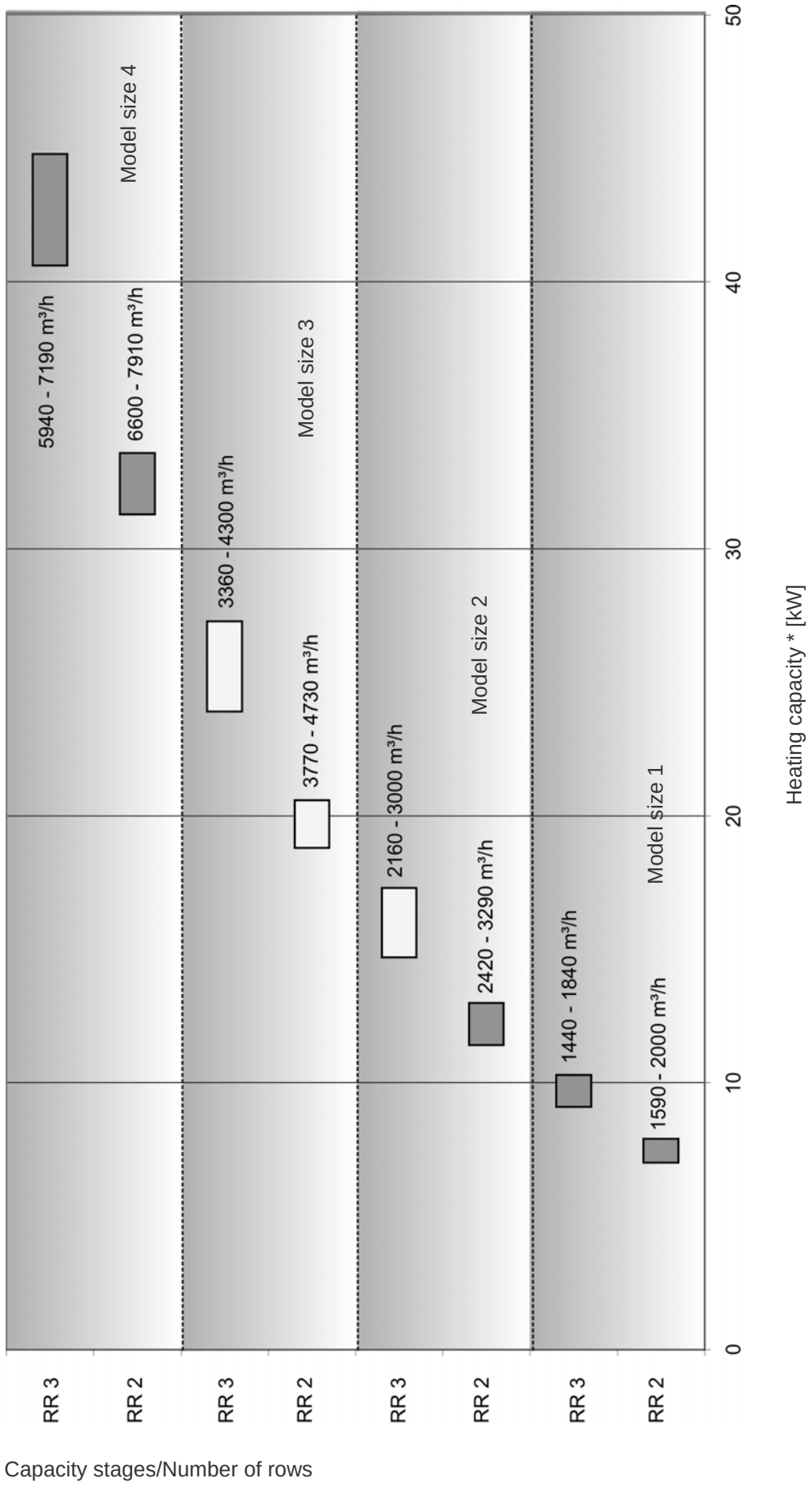

* Water 80/60 °C; air 20 °C
Air volume flow rate is calculated with stainless-steel heat exchanger, profile outlet, 3x400 V 2-speed wide-blade fan.

Fig. 2: Diagram with capacity overview

PART 1: *Unit Description*

PART 2: *Unit example*

PART 3: *Unit data*

PART 4: *Control/Regulation Systems*

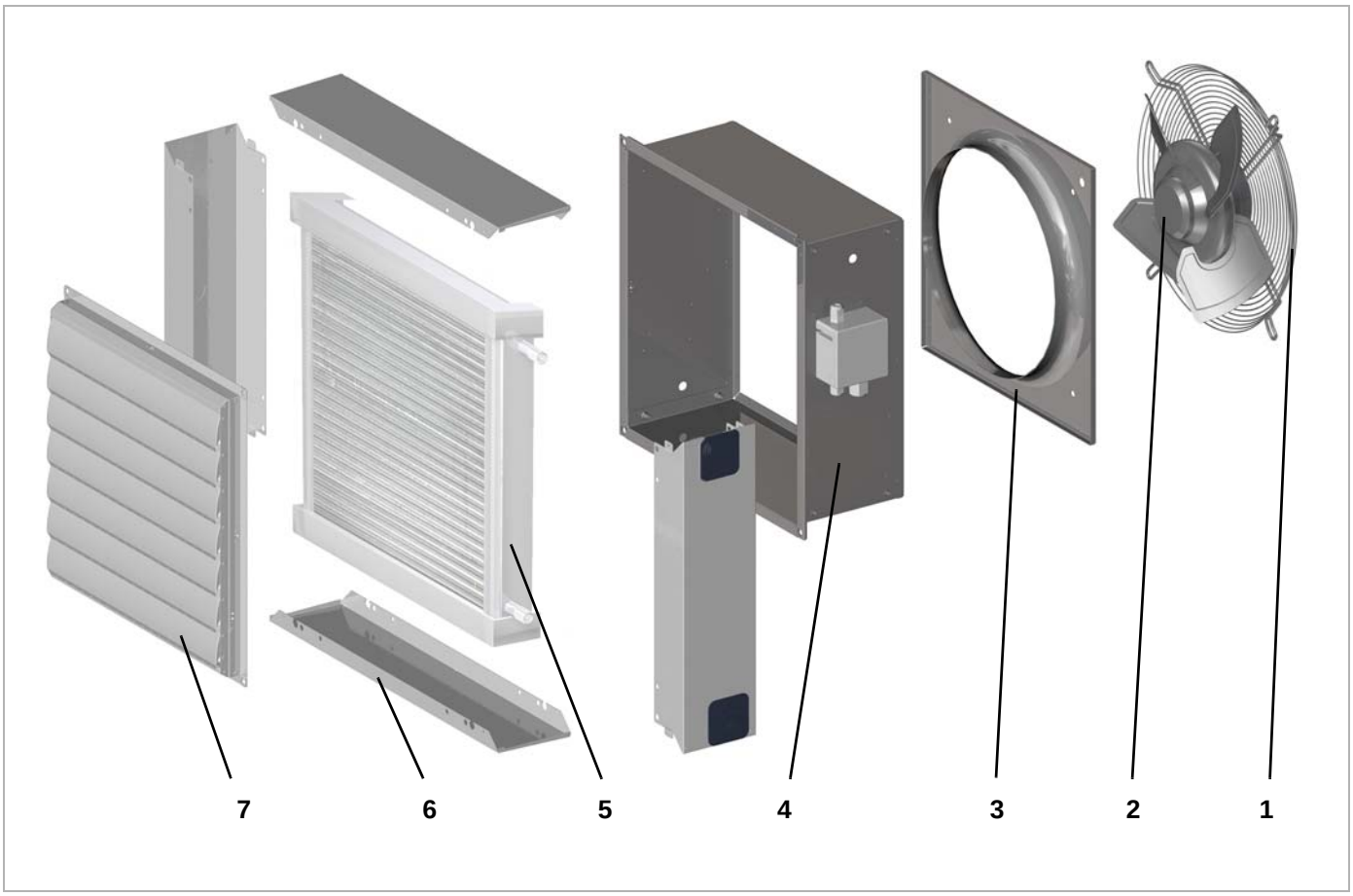

Fig. 3: Sample unit design with description of unit components

1: *Contact protection grille*
2: *Wide-blade fan with external rotor motor, dustproof and corrosion-protected*
3: *Air inlet nozzle*
4: *Fan casing*
5: *Heat exchanger, fully galvanized*
6: *Heat exchanger casing*
7: *Basic outlet*

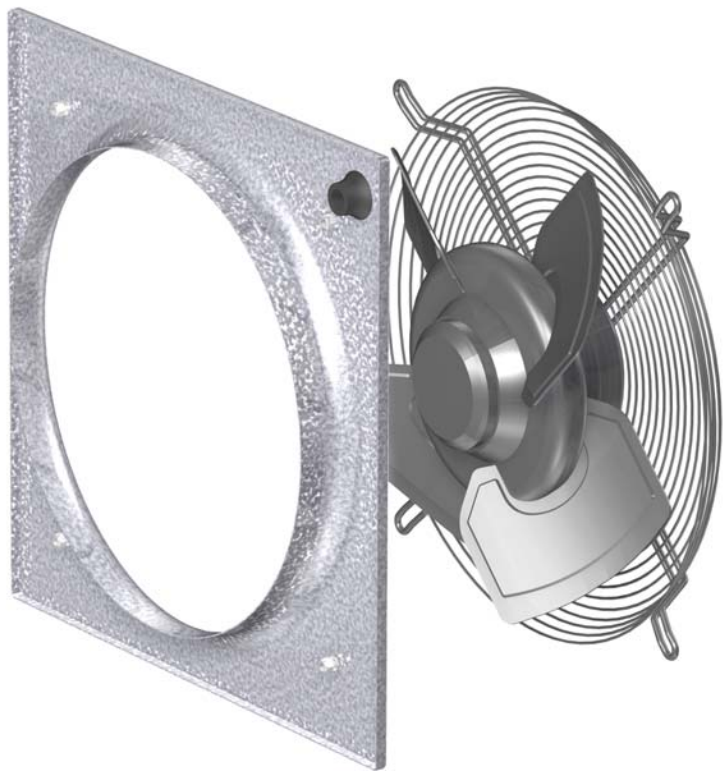

Fig. 4: Wide-blade fan, dust-protected

Wide-blade fan, dust-protected

Standard axial fan with an external rotor motor for normal pressure and sound requirements as well as fan protection curb with an integrated contact protection grille according to DIN EN 294.

Aluminium wide blades, balanced by the factory, maintenance-free with moisture-proof motor and wired to the terminal box.

IP 54 protection class, thermal class F, thermal contact in 3 variants 400 V, and 2 variants 230 Hz.

Air inlet nozzle is performed as short nozzle.

Range of application:	
Air inlet temperature:	-20° to +45°C

Fully galvanized heat exchanger

Fig. 5: Galvanized HE

High-performance industrial heat exchanger for heating with hot water or steam (not shown) for highest air pollution in fully galvanized design (HE with collector and finned tubes are fully galvanized).

Extremely robust, heavy construction as well as efficient and reliable heat transfer between pipes and fins using elliptical or circular FläktGroup steel finned pipes with high mechanical stability. Intensive, continuous heat transfer between pipes and fins thanks to galvanization technology, sections performed as pressure-resistant welded construction, fin spacing 3.0 or 6.0 mm, with 1-2 rows. (Further models on request.)

Range of application:	**Pumped Warm/Hot Water**	**Steam**
Maximum operating temperature:	130 °C	130 °C
Maximum operating pressure 1 row:	16 bar	8 bar
Maximum operating pressure 2 rows:	10 bar	–

The heat exchanger variants with pumped warm / hot water are fitted with top, right or left connections, the heat exchanger with steam configuration is performed only with a medium connection from top!

Stainless steel - HE Material No.: 1.4571 (DIN 1541)

Fig. 6: Steel HE

High performance industrial heat exchanger for pumped hot water or steam heating (without figure) for heavily contaminated air. Extremely robust, heavy-duty design and efficient, long-lasting heat transfer from tube to stainless steel fins (Laserfin finned tube) due to gap-free welding, chambers as pressure-resistant welded construction. Finned tube spacing 2.8 mm, with 1-3 tube rows.

Range of application:	Pumped Warm/Hot Water	Steam
Maximum operating temperature:	160 °C	160 °C
Maximum operating pressure 1 row:	–	16 bar
Maximum operating pressure 2 rows:	12 bar	12 bar
Maximum operating pressure 3 rows:	10 bar	–

Stainless steel **heat exchangers** are suited for **medium connection on the right or left side!**

Heat exchanger casing

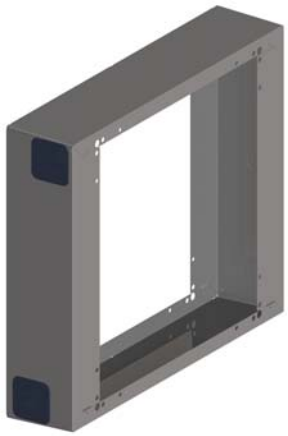

Fig. 7: Industrial type casing

The industrial variant of the stainless steel heat exchanger casing is a robust, factory-assembled casing suited for industrial heating applications.

Profile outlet wall and ceiling

Fig. 8: Profile outlet

The profiled-section air outlet serves to increase the air-outlet velocity. In such a way the unit can be easily installed at average ceiling heights and air throw (wall unit).

The profile outlet is manually adjustable and self-locking, installed in a stainless steel frame.

Basic wall outlet with stainless steel frame

Fig. 9: Basic wall outlet

In the basic wall outlet, stainless steel blades allow the conditioned air to be directed into the desired outlet angle.

The fins are self-locking and can be adjusted manually.

Four-side outlet

Fig. 10: Four-side outlet

Air distribution device for low mounting heights made of stainless steel. Independent adjustability in four directions enables to individually direct air volume flow. Direct air flow in the vertical range located below can be prevented.

The fins are self-locking and can be adjusted manually.

Outlet nozzle

Fig. 11: Outlet nozzle

Square cone-shaped nozzle made of stainless steel.

Therefore air velocity is increased which enables larger installation heights.

Gate nozzle

Fig. 12: Gate nozzle

Nozzle made of stainless steel, cone-shaped on one side.

Therefore air velocity is increased which enables targeted deflection of air volume flow for shielding lager gates in combination with multiple units.

To make it easier for you to use the catalog, we have construed four typical application examples. They show how to proceed in order to lay out a comparable facility with FläktGroup Multi*MAXX* HS units.

Here, increased demands are placed on the cleanability and corrosion resistance of heating and ventilation equipment, in some cases even in humid room environments. Besides reaching the required fresh air volume flow, meeting the transmission and air ventilation heat requirement is also critical in these operating conditions.

These recirculating-air or mixed-air units are then supplied with the corrosion-protected, dust-tight fan motor. They can be selected for wall or ceiling mounting.

The outlet variants are available as base, profile or four-side outlet, or can be selected as gate nozzle or outlet nozzle. This depends on the height of the room and the desired mounting form.

The FläktGroup MATRIX control system, which is protected by a stainless steel housing, also offers you perfect control in this case.

All suction-side accessories are also available in stainless steel. For extremely rare ambient conditions, however, these equipment features must be coordinated in advance due to special requirements.

We strongly recommend to use filters and wide-range suction side accessories due to increased pressure losses! Our sales staff can support you in the selection process.

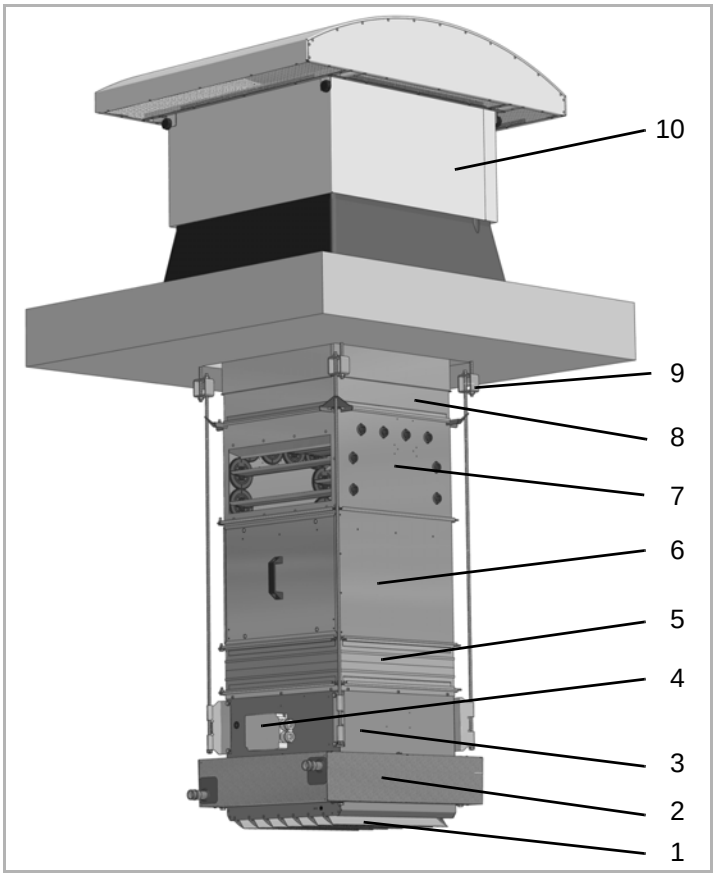

Sample of ceiling mounting

Pos No.	Unit/ accessory item	Unit/accessory type code
1	Profile outlet in stainless steel	HSnm.MWEROP.FKE
2	Heat exchanger module made of stainless steel with industrial cladding	
3	Fan module (painted wide-blade, dust-tight)	
4	Integrated control system	
5	Flexible connection, stainless steel	ZHn.2510
6	Pocket filter module incl. filter G3 with pressostat	ZHn.3616
7	Mixed-air module type 1	ZHn.2011
8	Ceiling suspension 2 m	ZHn.5612
9	Roof opening duct (not visible in the illustration) with flat roof-duct base	ZHn.4900
10	Roof air-intake hood	ZHn.35

n = model size 1...4 selectable
m = capacity stage/rows 1...3 selectable

Unit Selection

The FläktGroup MATRIX control system allows numerous control influences to be made which guarantee you every comfort in ventilation:
The FläktGroup MATRIX control system regulates the required air volume by selecting the fan speed and activates or deactivates the outdoor-air volume via the outdoor-air temperature sensor and supply-air sensor. Used correctly, it ensures optimum air speeds with air volume flow adjustment, minimum energy consumption through free cooling or warm-air supply via outdoor temperature control by means of modulating mixed air, thus ensuring an all-round comfortable atmosphere.

Conversion of sound power into sound pressure

Radiation of sound source without reflections

Spherical Hemispherical Quarter-spherical

Only theoretical dimension Practical application

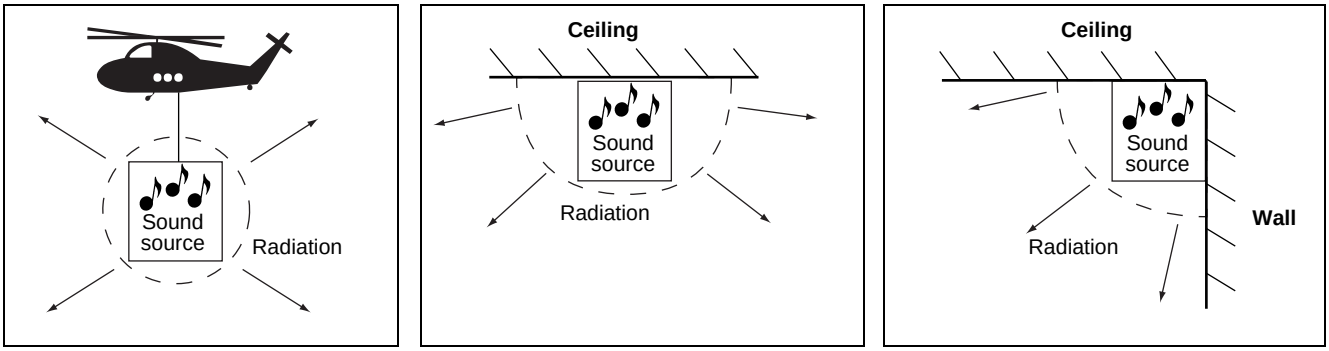

Direction coefficient 1 | Direction coefficient 2 | Direction coefficient 4

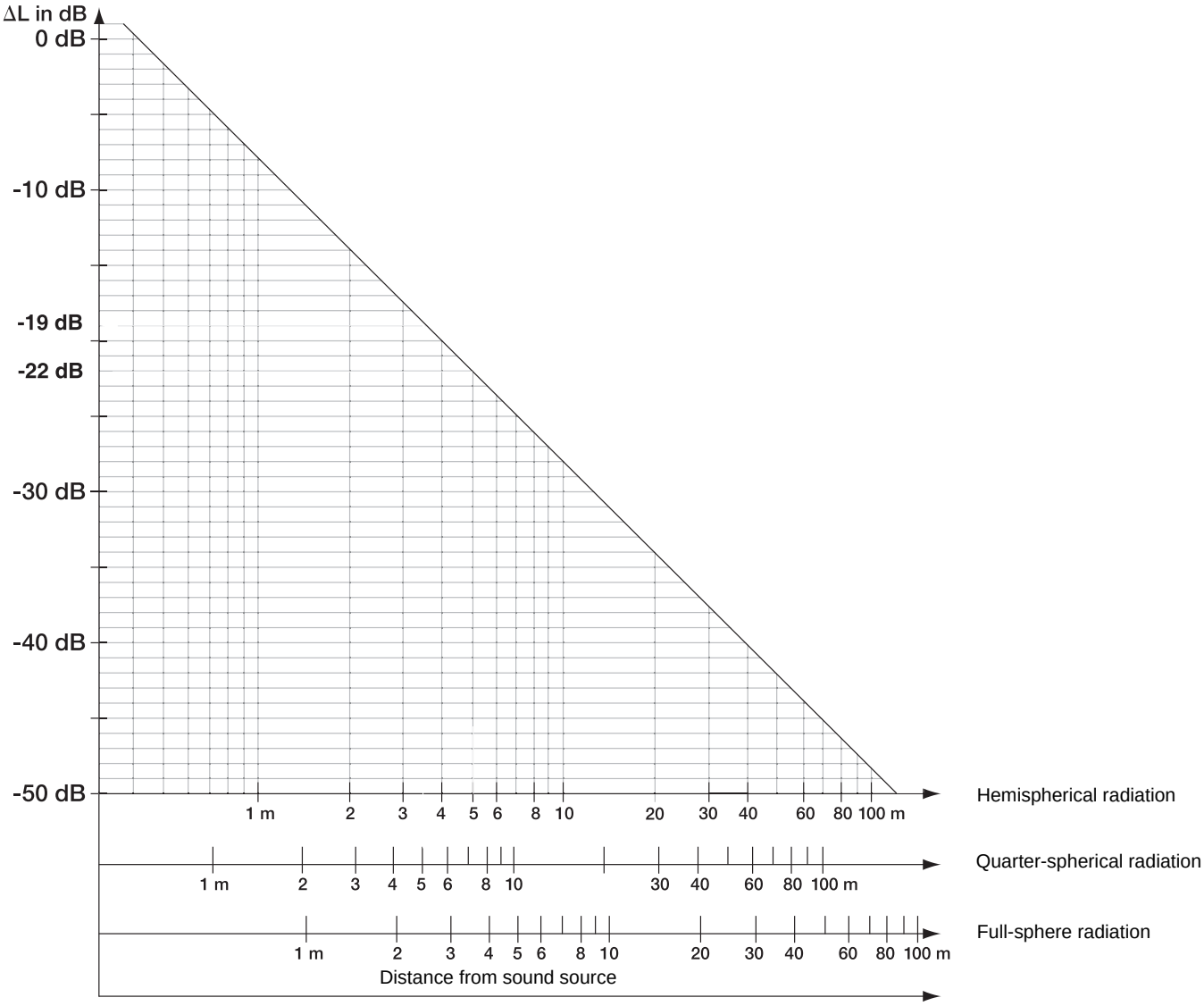

Sound power level:measurable, but not perceptible. Like the heat output of a radiator.

Sound pressure level:can be measured and perceived. Like the increase in room temperature by a radiator.

Model size	Speed		Sound power level (dB)								A-rated sum level		Max. power rating [kW]	Max. amperage [A]
			Octave medium frequency (Hz)								Sound power [dB(A)]	Sound pressure* [dB(A)]		
	Speed	[RPM]	63	125	250	500	1000	2000	4000	8000				
F - 3 ~ 400 V 2-speed high speed range - heating														
1	3	1320	60	70	67	65	65	65	61	53	71	56	0,14	0,49
	2	1050	54	65	65	60	62	61	57	47	67	52	0,09	0,28
2	3	1270	73	80	79	67	70	69	65	58	76	61	0,29	0,61
	2	890	70	73	63	64	64	62	58	49	69	54	0,19	0,35
3	3	900	83	75	81	70	69	68	62	55	76	61	0,31	0,86
	2	660	70	72	75	63	64	62	56	47	70	55	0,20	0,50
4	3	910	80	81	85	77	73	72	69	62	81	66	0,51	1,31
	2	740	69	69	80	72	69	68	64	56	76	61	0,37	0,76

Tab. 1: Sound and electric data

** **Sound pressure**: Standard values at 5 m distance to the unit side, at maximum air volume flow and low-reflection room. Hall-type industrial building, Volume 1500 m^3, absorption surface 200 m^2 Sabin, hemispherical radiation = direction coefficient 2. These values can be significantly influenced by the indoor characteristics in a positive or negative way.*

About the performance data tables

For fast selection of FläktGroup Multi*MAXX* HS unit heaters, please use the following tables.

Notice!
Should you require further information, please contact our knowledgeable staff, who can design units for all application types using our layout software.

Capacity tables

The **tables** contain all parameters for all heat exchangers in terms of different medium temperature and air intake temperature.

Please refer to the relevant unit data on the following pages:

Recirculating/ mixed-air	**Heating** pumped warm water pumped hot water	**14**
	Heating Steam	**16**

Having selected a recirculating or mixed-air unit, choose the connection type of medium and the design of the heat exchanger connection.

Ordering codes

H	S	_	_	.	_	_	_	_	_	_	.	_	_	_

U - recirculating-air unit
M - mixed-air unit

O - Medium connection from top (only for steel HE)
R - Medium connection from right
L - Medium connection from left

O - without screw thread connection

Make your designated selection on this page.

Model size 1 – W - Pumped warm water

Fanmotor - Selection F > 400V 2-speed	Capacity stage 1			Capacity stage 2			Capacity stage 3			Capacity stage 4		
	1	2	3	1	2	3	1	2	3	1	2	3
Air volume flow[1] m³/h					1590	2000		1440	1840			
Air throw [2] Basis m					6,2	7,5		5,2	6,3			
Air throw [2] Profile m					7,4	9		6,3	7,6			
Max. height [2] Basis m					6	8		4,6	6,2			
Max. height [2] Profile m					8	10,6		6,2	8,2			

Wärmeleistungen / Auslasstemperatur		Q [kW]	t °C	Q [kW]	t °C	Q [kW]	t °C	Q [kW]	t °C	Q [kW]	t °C	Q [kW]	t °C	Q [kW]	t °C	Q [kW]	t °C	Q [kW]	t °C	Q [kW]	t °C	Q [kW]	t °C
80°/60°C	5 °C									10,0	23,7	11,2	21,6			12,9	31,7	14,7	28,7				
	10 °C									9,0	26,9	10,1	25,0			11,6	33,9	13,3	31,5				
	15 °C									8,1	30,1	8,9	28,3			10,3	36,3	11,9	34,2				
	18 °C									7,4	31,9	8,3	30,4			9,6	37,8	10,9	35,6				
	20 °C									7,0	33,2	7,9	31,7			9,1	38,7	10,3	36,7				
70°/50°C	5 °C									7,7	19,5	8,7	17,9			10,0	25,6	11,4	23,4				
	10 °C									6,8	22,7	7,5	21,2			8,6	27,8	9,9	26,1				
	15 °C									5,7	25,7	6,4	24,5			7,2	29,8	8,3	28,5				
	18 °C									5,0	27,4	5,7	26,4			6,3	30,9	7,3	29,9				
	20 °C									4,5	28,5	5,1	27,7			5,6	31,6	6,6	30,7				
60°/45°C	5 °C									6,9	18,0	7,7	16,4			8,8	23,3	10,2	21,5				
	10 °C									5,9	21,0	6,6	19,8			7,5	25,5	8,6	24,0				
	15 °C									4,8	24,1	5,4	23,1			6,1	27,7	7,1	26,5				
	18 °C									4,2	25,8	4,7	25,0			5,2	28,8	6,1	27,9				
	20 °C									3,7	27,0	4,3	26,3			4,6	29,6	5,4	28,8				
50°/35°C	5 °C									4,4	13,2	5,0	12,4			5,4	16,2	6,4	15,3				
	10 °C									3,3	16,3	3,6	15,3			4,6	19,5	5,0	18,1				
	15 °C									2,7	20,1	2,9	19,3			3,8	22,8	4,1	21,6				
	18 °C									2,4	22,5	2,5	21,8			3,3	24,7	3,5	23,7				
	20 °C									2,1	24,0	2,3	23,4			2,9	26,1	3,2	25,1				

Model size 2 – W - Pumped warm water

Air volume flow[1] m³/h										2420		3290				2160		3000					
Air throw [2] Basis m										6,6		8,6				5,4		7,1					
Air throw [2] Profile m										7,9		10,3				6,5		8,5					
Max. height [2] Basis m										6,3		9,4				4,7		7,1					
Max. height [2] Profile m										8,5		12,6				6,3		9,5					
Wärmeleistungen / Auslasstemperatur		Q [kW]	t °C	Q [kW]	t °C	Q [kW]	t °C	Q [kW]	t °C	Q [kW]	t °C	Q [kW]	t °C	Q [kW]	t °C	Q [kW]	t °C	Q [kW]	t °C	Q [kW]	t °C	Q [kW]	t °C
80°/60°C	5 °C									15,6	24,2	17,7	21,0			19,9	32,5	23,5	28,3				
	10 °C									14,2	27,5	16,1	24,6			18,2	35,1	21,4	31,3				
	15 °C									12,7	30,7	14,6	28,2			16,4	37,6	19,3	34,2				
	18 °C									11,9	32,6	13,7	30,4			15,4	39,2	18,1	36				
	20 °C									11,4	34,0	13,0	31,8			14,7	40,2	17,3	37,1				
70°/50°C	5 °C									12,5	20,4	14,3	18,0			16,1	27,3	19	23,8				
	10 °C									11,1	23,7	12,6	21,4			14,4	29,8	16,9	26,8				
	15 °C									9,7	27,0	11,1	25,0			12,4	32,2	14,8	29,7				
	18 °C									8,9	29,0	10,1	27,2			11,4	33,7	13,4	31,3				
	20 °C									8,3	30,2	9,5	28,6			10,7	34,7	12,6	32,5				
60°/45°C	5 °C									11,0	18,5	12,6	16,4			14,1	24,5	16,6	21,5				
	10 °C									9,6	21,8	11,0	20,0			12,4	27,1	14,6	24,5				
	15 °C									8,2	25,1	9,3	23,4			10,5	29,5	12,5	27,4				
	18 °C									7,4	27,1	8,4	25,6			9,4	31	11,1	29				
	20 °C									6,8	28,3	7,7	27,0			8,7	32	10,3	30,2				
50°/35°C	5 °C									7,9	14,8	9,0	13,2			10,1	19	12	16,9				
	10 °C									6,5	18,0	7,4	16,7			8,2	21,4	9,8	19,8				
	15 °C									5,0	21,1	5,7	20,1			6,2	23,6	7,6	22,5				
	18 °C									3,9	22,8	4,6	22,2			4,8	24,7	6	23,9				
	20 °C									3,2	23,9	3,8	23,4			4,3	26	4,8	24,8				

Model size 3 – W - Pumped warm water

Air volume flow[1] m³/h										3770		4730				3360		4300					
Air throw [2] Basis m										7		8,5				5,8		7,1					
Air throw [2] Profile m										8,4		10,2				6,9		8,5					
Max. height [2] Basis m										6,7		9				5		6,8					
Max. height [2] Profile m										9		12				6,6		9					
Wärmeleistungen / Auslasstemperatur		Q [kW]	t °C	Q [kW]	t °C	Q [kW]	t °C	Q [kW]	t °C	Q [kW]	t °C	Q [kW]	t °C	Q [kW]	t °C	Q [kW]	t °C	Q [kW]	t °C	Q [kW]	t °C	Q [kW]	t °C
80°/60°C	5 °C									25,3	25,0	27,8	22,5			32,5	33,8	36,8	30,5				
	10 °C									23,1	28,3	25,4	26,0			29,5	36,1	33,7	33,3				
	15 °C									20,9	31,5	23,0	29,5			26,7	38,6	30,5	36,1				
	18 °C									19,6	33,5	21,6	31,6			25,0	40,2	28,6	37,8				
	20 °C									18,8	34,8	20,6	33,0			23,9	41,2	27,3	38,9				
70°/50°C	5 °C									20,6	21,3	22,7	19,3			26,3	28,3	30,1	25,8				
	10 °C									18,3	24,4	20,3	22,8			23,5	30,8	26,6	28,5				
	15 °C									16,1	27,7	17,9	26,2			20,7	33,3	23,5	31,2				
	18 °C									14,8	29,7	16,4	28,3			19,0	34,9	21,6	32,9				
	20 °C									13,9	31,0	15,4	29,7			17,9	35,9	20,3	34,0				
60°/45°C	5 °C									18,0	19,3	19,8	17,5			23,0	25,4	26,3	23,2				
	10 °C									15,9	22,5	17,4	21,0			20,2	27,9	23,1	26,0				
	15 °C									13,5	25,7	15,0	24,5			17,4	30,5	19,7	28,7				
	18 °C									12,2	27,7	13,6	26,6			15,7	31,9	17,8	30,4				
	20 °C									11,4	29,0	12,6	27,9			14,6	33,0	16,6	31,5				
50°/35°C	5 °C									13,2	15,4	14,7	14,2			17,0	20,1	19,3	18,3				
	10 °C									11,0	18,7	12,1	17,6			14,0	22,4	16,1	21,1				
	15 °C									8,7	21,9	9,7	21,1			11,1	24,9	12,7	23,8				
	18 °C									7,2	23,7	8,1	23,1			9,2	26,2	10,6	25,3				
	20 °C									6,3	25,0	7,0	24,4			7,9	27,0	9,2	26,3				

Model size 4	Fan motor - Selection		Capacity stage 1						Capacity stage 2						Capacity stage 3						Capacity stage 4					
	F > 3x400V 2-speed		1		2				1		2		3		2		2		3		1		2			
	Air volume [1]	m³/h									5630		7510				5180		6980							
	Air throw [2] Basis	m									6,9		8,7				5,8		7,3							
	Air throw [2] Profile	m									7,6		9,6				6,5		8,2							
	Max. height [2] Basis	m									6		8,5				4,7		6,6							
	Max. height [2] Profile	m									7,3		10,5				5,8		8,3							
W - Pumped warm water	**Heating capacities / Discharge temperature**		**Q [kW]**	**t °C**	**Q [kW]**	**t °C**	**Q [kW]**	**t °C**	**Q [kW]**	**t °C**	**Q [kW]**	**t °C**	**Q [kW]**	**t °C**	**Q [kW]**	**t °C**	**Q [kW]**	**t °C**	**Q [kW]**	**t °C**	**Q [kW]**	**t °C**	**Q [kW]**	**t °C**	**Q [kW]**	**t °C**
80°/60°C	5	°C									63,4	38,6	74,3	34,5			77,3	49,5	94,2	45,2						
	10	°C									58,2	40,8	68,2	37,1			71,4	51,1	86,6	47,0						
	15	°C									53,0	43,0	62,1	39,6			65,4	52,6	79,0	48,7						
	18	°C									49,9	44,4	58,3	41,1			61,1	53,1	74,4	49,7						
	20	°C									47,3	45,0	55,8	42,1			58,6	53,7	71,3	50,4						
70°/50°C	5	°C									51,7	32,3	61,0	29,2			64,1	41,9	77,9	38,2						
	10	°C									46,4	34,6	54,8	31,8			57,9	43,3	70,2	40,0						
	15	°C									41,1	36,8	48,1	34,1			51,5	44,6	61,9	41,4						
	18	°C									37,9	38,1	44,4	35,6			47,7	45,4	57,2	42,4						
	20	°C									35,8	38,9	41,9	36,6			45,0	45,9	54,0	43,0						
60°/45°C	5	°C									45,3	29,0	53,0	26,0			55,5	36,9	67,5	33,8						
	10	°C									39,7	31,0	46,9	28,6			49,3	38,4	59,9	35,6						
	15	°C									34,4	33,2	40,7	31,2			43,1	39,8	52,2	37,3						
	18	°C									31,3	34,5	36,6	32,5			38,9	40,4	47,1	38,1						
	20	°C									29,1	35,4	34,1	33,5			36,3	40,9	43,9	38,7						
50°/35°C	5	°C									33,6	22,8	39,3	20,6			41,8	29,0	50,6	26,6						
	10	°C									28,3	25,0	33,0	23,1			35,4	30,4	42,8	28,3						
	15	°C									22,6	27,0	26,5	25,5			28,7	31,5	34,6	29,8						
	18	°C									19,1	28,1	22,6	27,0			24,5	32,1	29,8	30,7						
	20	°C									16,8	28,9	19,8	27,8			21,7	32,5	26,2	31,2						

1 Air volume flow rate: specified data in the table are calculated for units with fan type "F" = 2-speed with profile outlet and stainless steel heat exchanger.

2 Air throw: air throw is calculated for air intake temperature 20 °C and medium temperature 70 °C/50 °C.
The values are valid for air discharge temperature up to 15 K greater than air intake temperature. Pay attention to medium values!

Ordering codes

H S _ _ . _ W _ _ _ _ . _ _ _

Model size (1,2,3,4)

Capacity stages (2, 3)

X – Fully galvanized, elliptical finned pipe; 1.6 MPa - fin spacing 3 mm

Y – Fully galvanized, elliptical finned pipe; 1.6 MPa - fin spacing 6 mm

E – Stainless steel, circular finned pipe; 1.6 MPa - fin spacing 2.8 mm

F = 3 ~ 400 V 2-speed - high speed range - wide-blade fan

Make your designated selection on these two pages.

Model size 1

Fan motor - Selection		Capacity stage 1			Capacity stage 2			Capacity stage 3			Capacity stage 4		
F > 400V 2-speed		1	2	3	1	2	3	1	2	3	1	2	3
Air volume flow [1]	m³/h		1810	2250		1590	2000						
Air throw[2] Basis	m		5	6		3,7	4,5						
Air throw [2] Profile	m		6	7,2		4,4	5,3						
Max. height [2] Basis	m		4,3	5,7		2,7	3,6						
Max. height [2] Profile	m		5,8	7,7		3,6	4,8						

Heating capacities / Discharge temperature			Q [kW]	t °C	Q [kW]	t °C	Q [kW]	t °C	Q [kW]	t °C	Q [kW]	t °C	Q [kW]	t °C	Q [kW]	t °C	Q [kW]	t °C	Q [kW]	t °C	Q [kW]	t °C	Q [kW]	t °C
W - PHW	140°/ 100°C	5 °C			27,3	47,8	30,3	44,1			18,5	39,6	20,4	35,4										
		10 °C			25,3	51,6	28,2	47,3			17,4	42,5	19,4	38,8										
		15 °C			23,9	54,3	26,7	50,3			16,4	45,7	18,3	42,3										
		18 °C			23,1	55,9	25,8	52,1			15,9	47,6	17,7	44,3										
		20 °C			22,5	57,0	25,2	53,3			15,5	48,9	17,3	45,7										
	110°/ 70°C	5 °C			17,1	33,1	19,1	30,3			11,7	27,0	13,1	24,5										
		10 °C			15,7	35,8	17,4	33,0			10,8	30,2	12,1	27,9										
		15 °C			14,2	38,4	15,8	35,9			9,8	33,3	10,8	31,1										
		18 °C			13,2	39,7	14,8	37,6			9,1	35,0	10,2	33,2										
		20 °C			12,6	40,7	14,2	38,8			8,7	36,2	9,7	34,5										
S - Steam	3 bar	5 °C			15,8	31,0	17,1	27,7			27,0	55,5	30,0	49,7										
		10 °C			15,3	35,1	16,5	31,9			26,0	58,7	29,0	53,1										
		15 °C			14,7	39,2	15,9	36,1			25,1	61,9	27,9	56,5										
		18 °C			14,4	41,6	15,6	38,6			24,5	63,8	27,3	58,6										
		20 °C			14,1	43,2	15,3	40,3			24,1	65,1	26,9	60,0										
	0,5 bar	5 °C			12,1	24,9	13,1	22,4			20,7	43,8	23,0	39,3										
		10 °C			11,6	29,0	12,5	26,6			19,8	47,0	22,0	42,7										
		15 °C			11,0	33,1	11,9	30,8			18,8	50,2	20,9	46,2										
		18 °C			10,7	35,6	11,6	33,3			18,2	52,1	20,3	48,2										
		20 °C			10,5	37,2	11,3	35,0			17,9	53,4	19,9	49,6										

Model size 2

Air volume flow [1]	m³/h			2740		3620				2420		3290												
Air throw [2] Basis	m			5,7		7,3				4,2		5,4												
Air throw [2] Profil	m			6,8		8,7				5		6,5												
Max. height [2] Basis	m			5,1		7,3				3,2		4,7												
Max. height [2] Profile	m			6,8		9,8				4,3		6,3												

Heating capacities / Discharge temperature			Q [kW]	t °C	Q [kW]	t °C	Q [kW]	t °C	Q [kW]	t °C	Q [kW]	t °C	Q [kW]	t °C	Q [kW]	t °C	Q [kW]	t °C	Q [kW]	t °C	Q [kW]	t °C	Q [kW]	t °C
W - PHW	140°/ 100°C	5 °C			42,1	48,1	47,0	42,1			28,2	39,7	32,0	34,0										
		10 °C			39,0	52,3	44,1	46,3			26,8	43,0	30,5	37,6										
		15 °C			37,0	55,1	41,9	49,4			25,4	46,3	28,9	41,2										
		18 °C			35,8	56,8	40,5	51,3			24,6	48,3	28,0	43,3										
		20 °C			35,0	58,0	39,6	52,6			24,1	49,6	27,4	44,7										
	110°/ 70°C	5 °C			27,7	35,1	31,6	31,0			19,0	28,4	21,8	24,8										
		10 °C			25,7	37,9	29,1	33,9			17,7	31,7	20,1	28,2										
		15 °C			23,7	40,7	26,8	37,0			16,3	35,0	18,5	31,7										
		18 °C			22,5	42,4	25,4	38,9			15,4	37,0	17,6	33,9										
		20 °C			21,6	43,5	24,5	40,1			14,9	38,3	16,9	35,3										
S - Steam	3 bar	5 °C			22,3	29,3	24,6	25,2			38,7	52,6	44,2	45,0										
		10 °C			21,6	33,4	23,7	29,5			37,3	55,9	42,7	48,6										
		15 °C			20,8	37,6	22,9	33,8			36,0	59,2	41,2	52,2										
		18 °C			20,3	40,1	22,3	36,4			35,2	61,2	40,2	54,4										
		20 °C			20,0	41,7	22,0	38,1			34,6	62,5	39,6	55,8										
	0,5 bar	5 °C			17,1	23,6	18,8	20,5			29,7	41,5	33,9	35,7										
		10 °C			16,4	27,8	18,0	24,8			28,3	44,8	32,4	39,3										
		15 °C			15,6	31,9	17,1	29,1			27,0	48,2	30,8	42,9										
		18 °C			15,1	34,4	16,6	31,7			26,1	50,1	29,9	45,1										
		20 °C			14,8	36,1	16,3	33,4			25,6	51,5	29,3	46,5										

Model size 3

Air volume flow [1]	m³/h			4420		5320				3770		4730												
Air throw [2] Basis	m			6,3		7,5				4,5		5,5												
Air throw [2] Profil	m			7,6		8,9				5,4		6,6												
Max. height [2] Basis	m			5,8		7,4				3,5		4,6												
Max. height [2] Profile	m			7,6		9,8				4,6		6,2												

Heating capacities / Discharge temperature			Q [kW]	t °C	Q [kW]	t °C	Q [kW]	t °C	Q [kW]	t °C	Q [kW]	t °C	Q [kW]	t °C	Q [kW]	t °C	Q [kW]	t °C	Q [kW]	t °C	Q [kW]	t °C	Q [kW]	t °C
W - PHW	140°/ 100°C	5 °C			69,2	50,2	75,8	45,1			45,5	40,9	50,6	36,8										
		10 °C			64,0	53,1	70,2	49,3			43,3	44,2	48,2	40,3										
		15 °C			60,8	55,9	66,7	52,3			41,2	47,5	45,8	43,8										
		18 °C			58,9	57,6	64,6	54,1			39,9	49,4	44,3	45,9										
		20 °C			57,6	58,8	62,6	55,0			39,0	50,7	42,9	47,0										
	110°/ 70°C	5 °C			46,6	36,4	50,5	33,2			31,5	29,9	34,6	26,8										
		10 °C			42,9	38,9	47,0	36,3			29,0	32,9	32,2	30,3										
		15 °C			39,7	41,7	43,4	39,3			26,8	36,2	29,8	33,7										
		18 °C			37,7	43,4	41,3	41,1			25,5	38,1	28,3	35,8										
		20 °C			36,4	44,5	39,9	42,3			24,6	39,4	27,4	37,2										
S - Steam	3 bar	5 °C			36,0	29,3	38,5	26,5			61,3	53,4	67,8	47,7										
		10 °C			34,8	33,4	37,1	30,8			59,1	56,7	65,5	51,2										
		15 °C			33,5	37,6	35,8	35,0			57,0	60,0	63,1	54,7										
		18 °C			32,8	40,0	35,0	37,6			55,7	61,9	61,7	56,8										
		20 °C			32,3	41,7	34,5	39,3			54,8	63,2	60,7	58,2										
	0,5 bar	5 °C			27,6	23,6	29,5	21,5			47,0	42,1	52,0	37,7										
		10 °C			26,4	27,8	28,1	25,7			44,9	45,4	49,7	41,3										
		15 °C			25,1	31,9	26,8	30,0			42,7	48,7	47,3	44,8										
		18 °C			24,4	34,4	26,0	32,5			41,4	50,7	45,9	46,8										
		20 °C			23,9	36,1	25,5	34,2			40,6	52,0	44,9	48,2										

Model size 4					Capacity stage 1				Capacity stage 2				Capacity stage 3				Capacity stage 4			
Fan motor - Selection																				
F > 400V 2-speed					1	2	3		1	2	3		1	2	3		1	2	3	
Air volume flow [1]				m³/h		7590	9100			6600	7910									
Air throw [2] Basis				m		7,7	9,1			5,6	6,5									
Air throw [2] Profil				m		9,2	10,8			6,7	7,8									
Max. height [2] Basis				m		7,3	9,3			4,5	5,7									
Max. height [2] Profile				m		9,8	12,5			6	7,6									
Heating capacities / Discharge temperature					**Q [kW]**	**t °C**	**Q [kW]**	**t °C**	**Q [kW]**	**t °C**	**Q [kW]**	**t °C**	**Q [kW]**	**t °C**	**Q [kW]**	**t °C**	**Q [kW]**	**t °C**	**Q [kW]**	**t °C**
W - PHW	**140°/ 100°C**	5	°C		112,4	47,0	119,1	44,1		75,3	39,0	81,7	35,7							
		10	°C		105,4	51,3	113,8	47,2		71,8	42,4	77,9	39,3							
		15	°C		100,2	54,3	108,2	50,4		68,3	45,8	74,1	42,8							
		18	°C		97,1	56,0	104,8	52,3		66,1	47,8	71,0	44,7							
		20	°C		95,0	57,2	102,6	53,5		64,7	49,2	69,5	46,1							
	110°/ 70°C	5	°C		77,4	35,4	83,4	32,3		52,7	28,8	56,5	26,2							
		10	°C		71,5	38,0	77,7	35,4		48,7	31,9	52,6	29,8							
		15	°C		66,3	41,0	72,1	38,6		45,1	35,3	48,8	33,4							
		18	°C		63,1	42,7	68,7	40,5		43,0	37,4	46,5	35,5							
		20	°C		61,0	43,9	66,4	41,7		41,5	38,7	45,0	36,9							
S - Steam	**3 bar**	5	°C		57,3	27,5	60,9	24,9		99,9	50,0	107,8	45,5							
		10	°C		55,3	31,7	58,8	29,2		96,4	53,4	104,0	49,1							
		15	°C		53,3	35,9	56,7	33,5		92,9	56,9	100,3	52,7							
		18	°C		52,1	38,4	55,4	36,1		90,8	58,9	98,0	54,8							
		20	°C		51,3	40,1	54,6	37,8		89,4	60,3	96,5	56,3							
	0,5 bar	5	°C		43,9	22,2	46,7	20,3		76,6	39,6	82,6	36,1							
		10	°C		41,9	26,4	44,6	24,6		73,1	43,0	78,9	39,7							
		15	°C		39,9	30,7	42,5	28,9		69,6	46,4	75,1	43,3							
		18	°C		38,7	33,2	41,2	31,5		67,5	48,4	72,8	45,4							
		20	°C		37,9	34,9	40,3	33,2		66,1	49,8	71,3	46,8							

1 Air volume flow rate: specified data in the table are calculated for units with fan type "F" = 2-speed with profile outlet and stainless steel heat exchanger.

2 Air throw: air throw is calculated for air intake temperature 20 °C and medium temperature 70 °C/50 °C.
The values are valid for air discharge temperature up to 15 K greater than air intake temperature. Pay attention to medium values!

Ordering code

H **S** _ _ . _ **S** _ _ _ _ . _ _ _

Model size (1,2,3,4)

Capacity stages (1,2)

X – Fully galvanized, elliptical finned pipe; 1.6 MPa - fin spacing 3 mm

Y – Fully galvanized, elliptical finned pipe; 1.6 MPa - fin spacing 6 mm

E – Stainless steel, circular finned pipe; 1.6 MPa - fin spacing 2.8 mm

F = 3 ~ 400 V 2-speed - high speed range - wide-blade fan

Make your designated selection on these two pages.

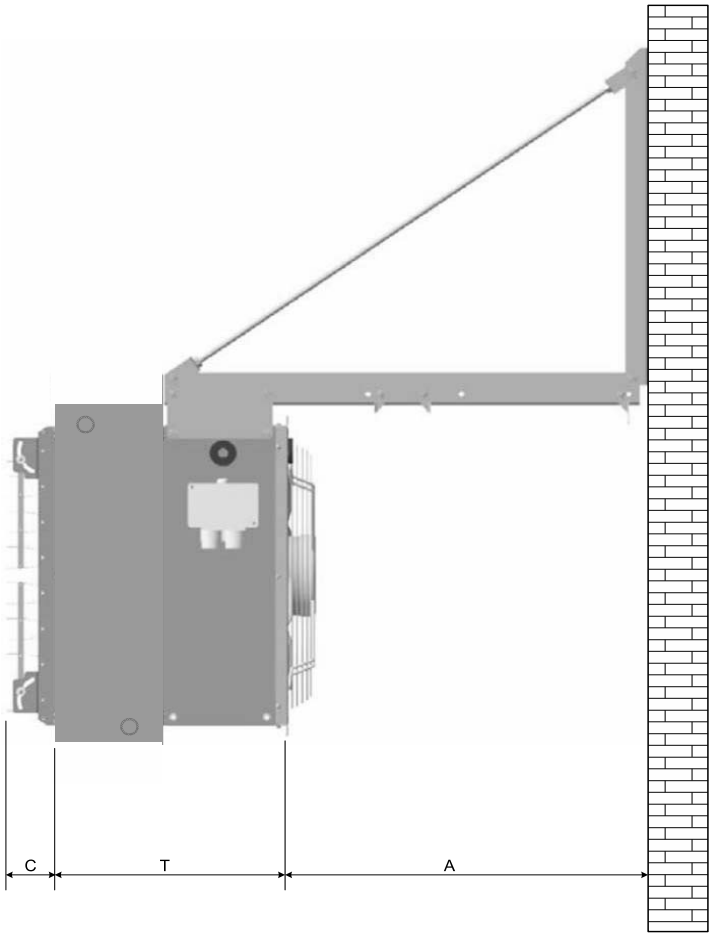

Fig. 13: Example for suspension and assembly with heat exchanger casing industry

Before moving on to section "Unit data" for data on weight and relevant individual unit dimensions, first pay attention to the example of a wall-mounted variant - here as example a **wall mounting**.

The heat exchanger modules are constant in the overall depth for all model sizes and also for all capacity stages (number of tube rows).

In addition, a distance A of 300 mm (but at least 50% of the fan diameter) from a wall or ceiling must be maintained for recirculation units in order to achieve the required air volume flow and thus the desired performance of your unit.

This distance is also fully sufficient for maintenance, which guarantees your unit performance over the entire life cycle of the unit.

Wall clearance - A (mm)						
			HS1	**HS2**	**HS3**	**HS4**
			300	300	400	400
Unit depth - T (mm)						
			HS1	**HS2**	**HS3**	**HS4**
Wide-blade fan			447	468	487	564
Depth of outlet - C (mm)						
Variants of outlets			**HS1**	**HS2**	**HS3**	**HS4**
Basis wall / Basic outlet ceiling, two side	B / Z	Ceiling / Wall	105	105	105	105
Four sides	V	Ceiling	190	260	260	260
Outlet nozzle	A	Ceiling	154	178	211	253
Gate nozzle	T	Ceiling / Wall	286	302	417	525
Profile	P	Ceiling / Wall	100	100	100	100
Terminating flange, pressure side	K	Ceiling / Wall	60	60	60	60

*Fully galvanized heat exchanger

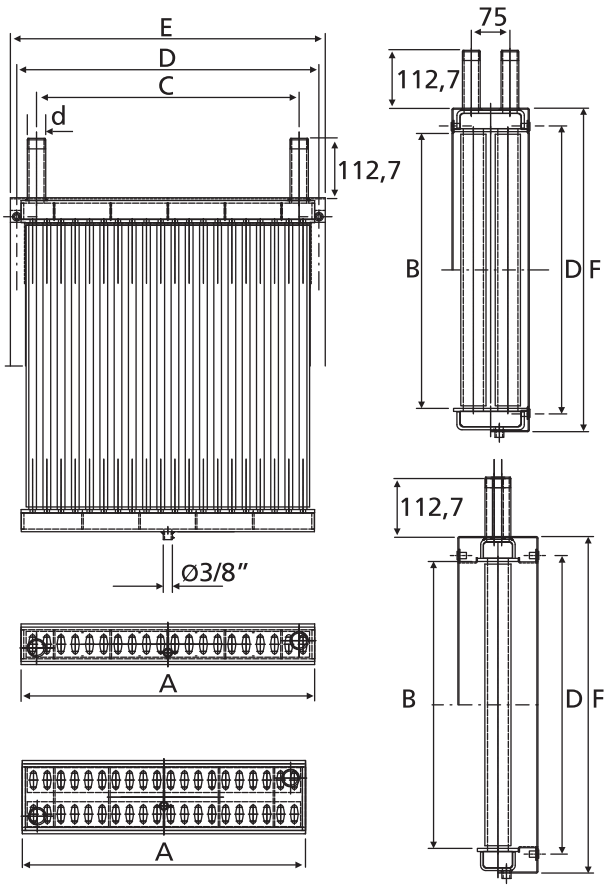

Fig. 14: Steel HE pumped warm/hot water

High-performance industrial heat exchanger for heating with **hot water** (PWW/PHW with 1-2 pipe rows) or **steam** for heavily contaminated air; fully galvanized; made of elliptical FläktGroup finned steel tubes, fin spacing 3.0 or 6.0 mm.

(Heat exchanger with round tube on request!)

Pumped warm/hot water variants

Model size	1		2		3		4	
Rows	**1**	**2**	**1**	**2**	**1**	**2**	**1**	**2**
Dimensions/empty weight								
A (mm)	454		550		678		838	
B (mm)	448		544		672		832	
C (mm)	396		492		620		780	
D (mm)	470		566		694		854	
E (mm)	490		586		714		874	
F (mm)	536		632		760		920	
Max. weight (kg)	26	49	37	69	55	105	80	150
Pipe connections (weld-on end/screw thread connection)								
∅ d	R 1"				R 1 ¼"			

The heat exchanger variants PWW/PHW are suitable for **connecting the coil** from the top, right and left.

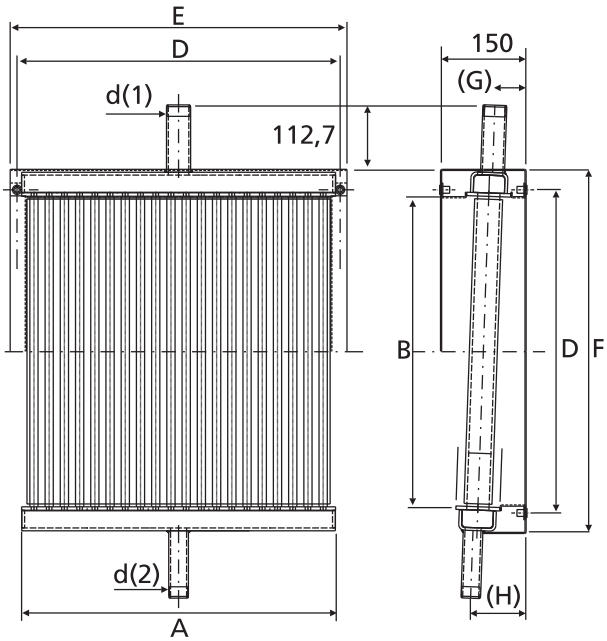

Fig. 15: Steel HE steam

Steam variant

Model size	1	2	3	4
Dimensions/empty weight				
A (mm)	454	550	678	838
B (mm)	448	544	672	832
D (mm)	470	566	694	854
E (mm)	490	586	714	874
F (mm)	538	634	762	922
G (mm)	54,4	52,7	50,5	47,5
H (mm)	95,5	97,3	99,5	102,5
Max. weight (kg)	26	37	55	80
Pipe connections (weld-on end)				
Steam inlet ∅ d (1)	R 1 ¼"			
Condensate outlet ∅ d (2)	R 1"			

With steam model heat exchanger **only medium connection from top is possible!**

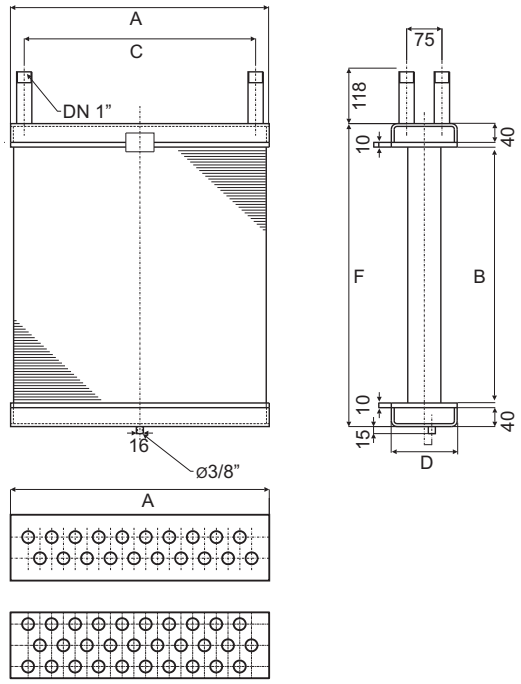

Fig. 16: Stainless steel HE pumped warm/hot water

Stainless steel HE

High-performance industrial heat exchanger for heating with hot water (PWW/PHW with 1-2 pipe rows) or steam for heavily contaminated air.

Made of elliptical FläktGroup steel finned pipes,
fin spacing 3.0 mm, hot-dip galvanized.

Pumped warm/hot water variants

Model size	1		2		3		4	
Rows	**2**	**3**	**2**	**3**	**2**	**3**	**2**	**3**
Dimensions/empty weight								
A (mm)	454	454	550	550	678	678	838	838
B (mm)	448	448	544	544	672	672	832	832
C (mm)	396	396	492	492	620	620	780	780
D (mm)	140	140	140	140	140	140	140	140
F (mm)	548	548	644	644	772	772	932	932
Max. weight (kg)	36	48	48	67	70	98	96	134
Pipe connections (weld-on end/screw thread connection)								
∅ d	R 1"				R 1 ¼"			

Heat exchangers for pumped warm/hot water are **performed for medium connections from the top, right or left side**.

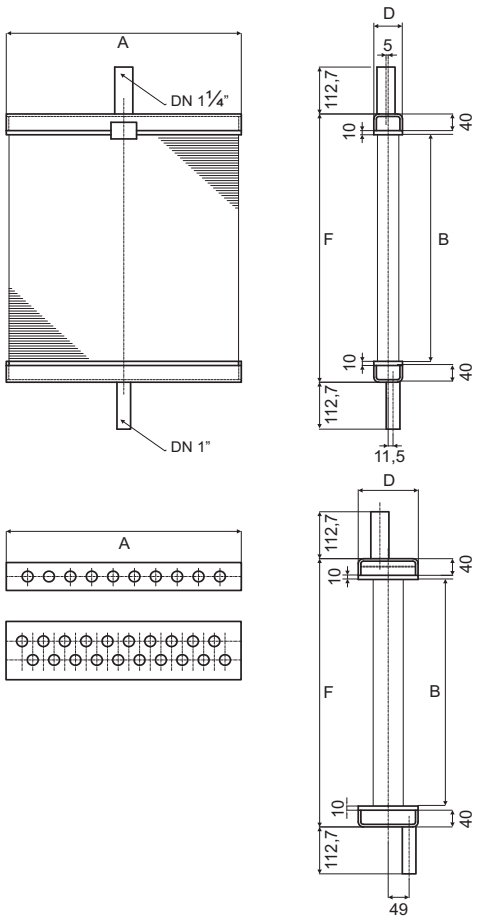

Fig. 17: Stainless steel HE for steam

Steam variant

Model size	1		2		3		4	
Rows	**1**	**2**	**1**	**2**	**1**	**2**	**1**	**2**
Dimensions/empty weight								
A (mm)	454	454	550	550	678	678	838	838
B (mm)	448	448	544	544	672	672	832	832
D (mm)	67	140	67	140	67	140	67	140
F (mm)	548	548	644	644	772	772	932	932
Max. weight (kg)	24	36	29	48	42	70	58	96
Pipe connections (weld-on end)								
Steam inlet ∅ d(1)	R 1 ¼"							
Condensate outlet ∅ d(2)	R 1"							

With steam model heat exchanger **only medium connection from top is possible!**

Profile outlet wall/ceiling

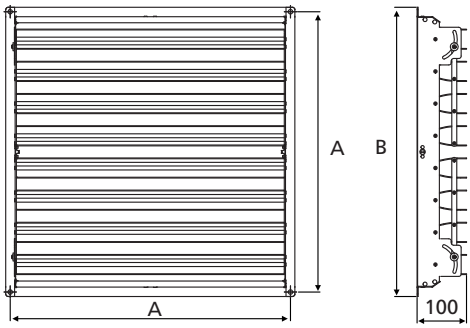

Fig. 18: Profile outlet

For increasing discharge velocity and air throw; manually adjustable, self-locking

H S # # . # # # # # P . # # E – Stainless steel frame, Painted aluminum fins

Model size	1	2	3	4
A (mm)	470	566	694	854
B (mm)	489	585	713	873
Weight (kg)	5,6	7,8	11,3	16,4

Two-side basic ceiling outlet

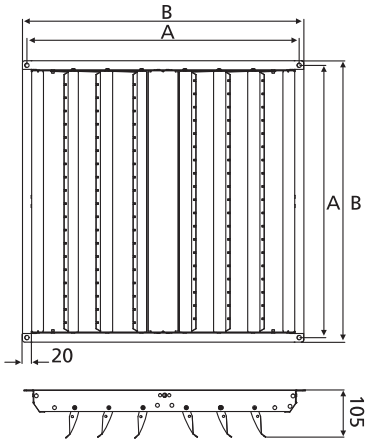

Fig. 19: Basic ceiling outlet

Air deflection unit for distributing supply air flow in 2 directions, manually adjustable and self-locking

H S # # . # # # # # Z . # # E – Stainless steel fins

Model size	1	2	3	4
A (mm)	470	566	694	854
B (mm)	489	585	713	873
Weight (kg)	2,5	3,6	5,4	8

Basic wall outlet

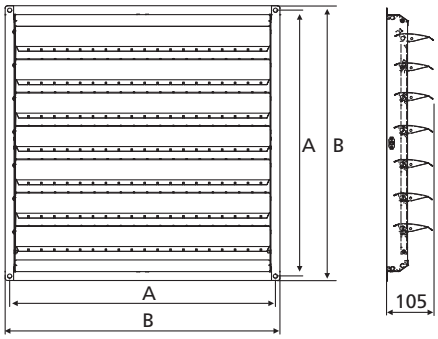

Fig. 20: Basic wall outlet

Louvers are curved outwards; adjustable, self-locking for changing direction air volume flow; manually adjustable, self-locking

H S # # . # # # # # B . # # E – Stainless steel fins

Model size	1	2	3	4
A (mm)	470	566	694	854
B (mm)	489	585	713	873
Weight (kg)	2,5	3,6	5,4	8

Terminating flange, pressure side

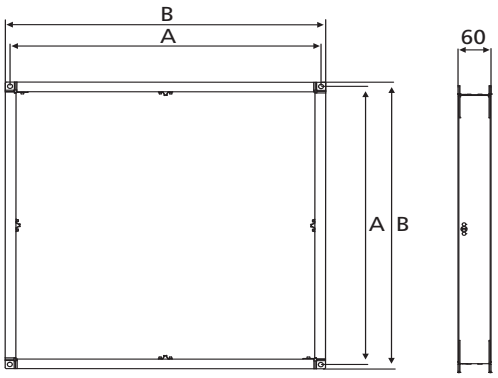

Fig. 21: Terminating flange, pressure side

For use without **discharge** for **wall and ceiling;** can be used for connection to a **short** pressure-side duct

H S # # . # # # # # K . # # E – Stainless steel

Model size	1	2	3	4
A (mm)	470	566	694	854
B (mm)	489	585	713	873
Weight (kg)	2,1	2,5	3,1	3,8

Flange width = 20 mm

Four-side outlet

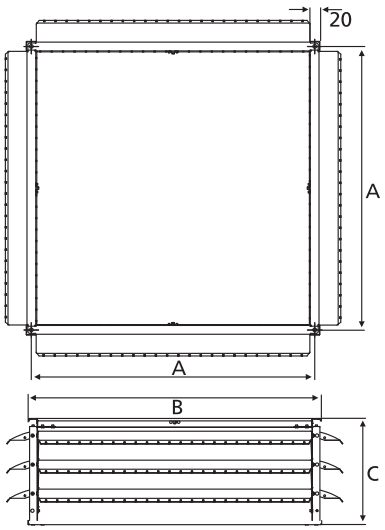

Fig. 22: Four-side outlet

Air deflection unit for low installation height (2.5 - 3.5 m); prevents direct blowing at persons; for air discharge in 4 sides

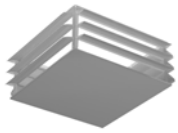

H S # # . # # # # # V . # # E – Stainless steel

Model size	1	2	3	4
A (mm)	470	566	694	854
B (mm)	489	585	713	873
C (mm)	190	260	260	260
Weight (kg)	6,4	8,5	11,9	16,6

Outlet nozzle

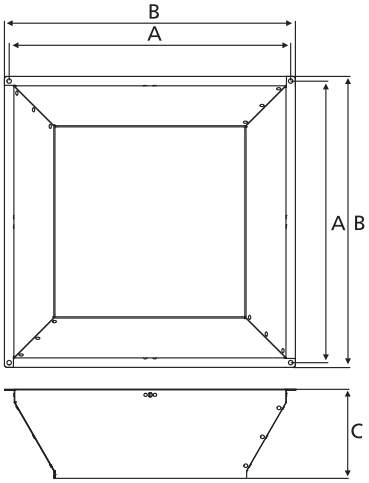

Fig. 23: Outlet nozzle

square; cone-shaped through reduction of outlet surface - air velocity and air throw are increased; for large installation heights

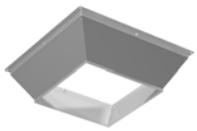

H S # # . # # # # # A . # # E – Stainless steel

Model size	1	2	3	4
A (mm)	470	566	694	854
B (mm)	489	585	713	873
C (mm)	154	178	211	253
Weight (kg)	3,6	5	7,2	10,5

Gate nozzle

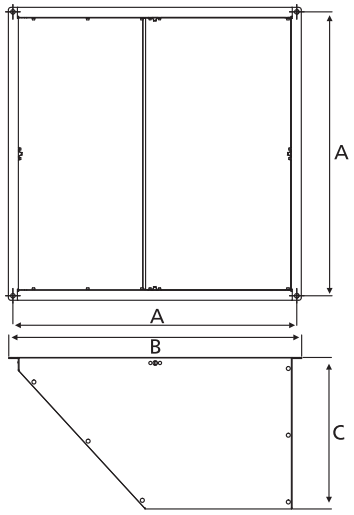

Fig. 24: Gate nozzle

Increase of discharge velocity; targeted routing of air volume flow in units; to be used as a gate shield

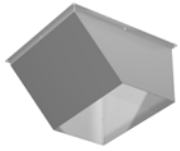

H S # # . **# # # # # T** . **# # E** – Stainless steel

Model size	1	2	3	4
A (mm)	470	566	694	854
B (mm)	489	585	713	873
C (mm)	286	302	417	525
Weight (kg)	4,4	5,6	9,1	14

Heat exchanger casing

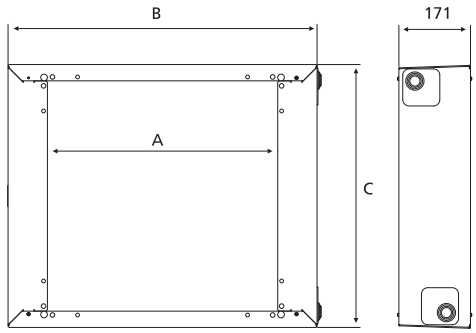

Fig. 25: Heat exchanger industrial casing

With the "E" model, all casing parts of the unit are made in stainless steel.

H S # # . **# # # # # # #** . **# # E** – **Industrial variant**
made of stainless steel, mounted by the manufacturer

Variant C/E	1	2	3	4
A (mm)	454	550	678	838
B (mm)	642	738	866	1026
C (mm)	532	628	756	916
Weight (kg)	5,1	6,2	7,6	9,4

Air-intake modules

Flange (only necessary for recirculating-air units)

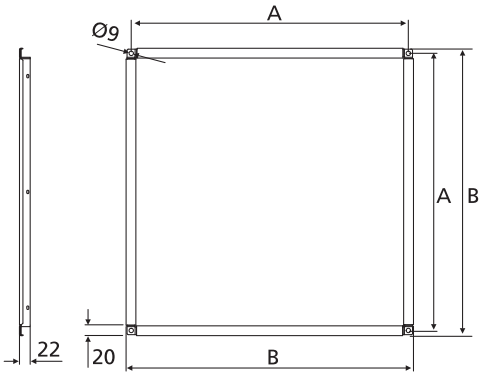

Fig. 26: Flange

Flange with peripheral mounting frame for suction-side accessories in recirculating-air units; standard with mixed-air units

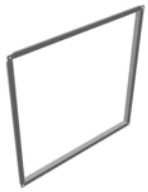

Z H # . **5 2 1 0** – made of stainless steel

Model size	1	2	3	4
A (mm)	470	566	694	854
B (mm)	491	587	715	875
Weight (kg)	2,6	3,1	3,9	4,8

Flange width = 20 mm

Rectangular duct 150

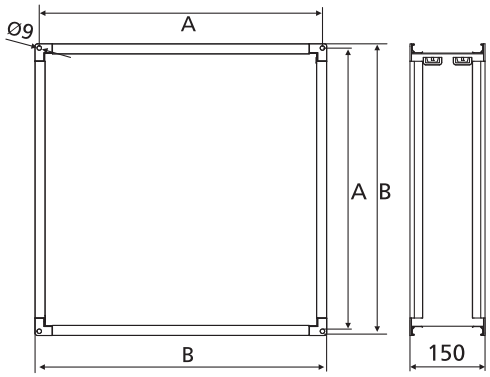

Fig. 27: Rectangular duct 150 mm

Spacer, overall length 150 mm, with a peripheral mounting frame

Z H # . 2 6 1 0 – made of stainless steel

Model size	1	2	3	4
A (mm)	470	566	694	854
B (mm)	487	583	711	871
Weight (kg)	1,8	2,2	2,7	3,3

Flange width = 20 mm

Flexible connection

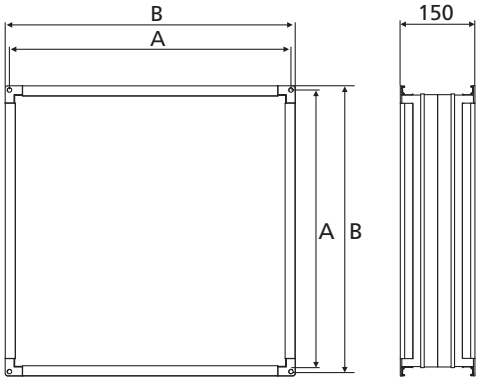

Fig. 28: Flexible connection

Air-tight, tear-resistant, elastic connection with the peripheral run-around mounting frame

Z H # . 2 5 1 0 – Frame made of stainless steel, overall length 150 mm

Model size	1	2	3	4
A (mm)	470	566	694	854
B (mm)	487	583	711	871
Weight (kg)	2,6	3,2	3,9	4,8

Flange width = 20 mm

Bag filter module

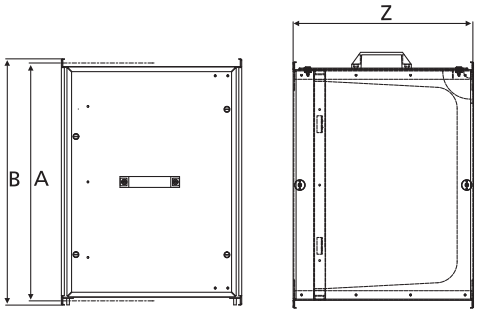

Fig. 29: Bag-filter module

Bag filter cassette, quality class G4 as of DIN EN 779; casing made of galvanized metal sheet or stainless steel; lateral service opening with 20 mm peripheral run-around connection frame

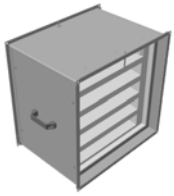

Z H # . 3 6 1 0 – Without filter, stainless steel
Z H # . 3 6 1 2 – with filter G2, stainless steel
Z H # . 3 6 1 4 – with filter G4, stainless steel

Model size	1	2	3	4
A (mm)	470	566	694	854
B (mm)	491	587	715	875
Z (mm)	430	430	430	430
Weight (kg)	13	16	20	25

Spare filter:

Z H # . 3 9 1 2 – Filter G2, stainless steel frame
Z H # . 3 9 1 4 – Filter G4, stainless steel frame

Mixed-air module, type 1

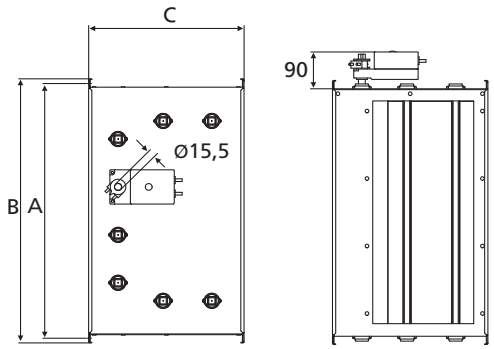

Fig. 30: Mixed-air module type 1 presented with an actuator manually adjustable variant without illustration

Direct, 1 fresh air damper (FA) and 2 recirculating-air louvers (RA); outdoor air and recirculating-air angled at 90°; shaft diameter = 15.5 mm

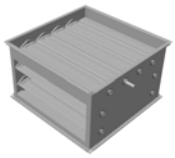

Z H # . 2 0 1 # – Stainless steel

Depending on configuration, please mark with an "x" according to "**Table: unit type code - Designation ...**" on Page 25.

Model size	1	2	3	4
A (mm)	470	566	694	854
B (mm)	491	587	715	875
C (mm)	340	340	450	450
Weight (kg) approx.	13	16	24	31

Mixed-air module, type 2

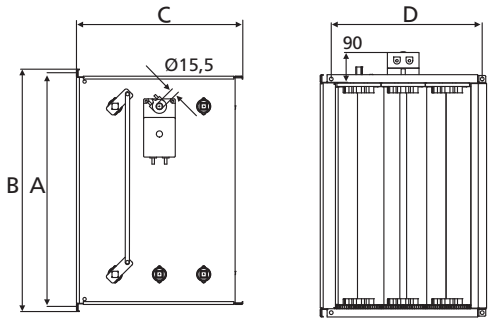

Fig. 31: Mixed-air module type presented with an actuator manually adjustable variant without illustration 2

Each model with 1 fresh air damper (FA) and 1 recirculating air louvre (RA); outdoor air and recirculating air at opposing 180°; shaft diameter = 15.5 mm

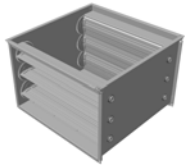

Z H # . 2 1 1 # – Stainless steel

Depending on configuration, please supply data according to "**Table: unit type code designation ...“** – see below.

Model size	1	2	3	4
A (mm)	470	566	694	854
B (mm)	491	587	715	875
C (mm)	400	400	450	510
D (mm)	380	380	430	490
Weight (kg) approx.	12.8	15.4	24.4	31.5

Outside air blocking damper

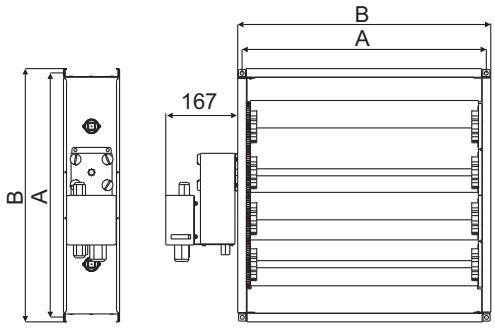

Fig. 32: Blocking damper for outdoor air presented here with an actuator manually adjustable variant without illustration

Fins made of galvanized metal sheet or stainless steel; shaft diameter = 15.5 mm

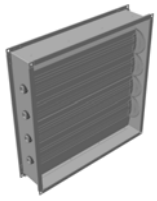

Z H # . 2 3 1 # – Stainless steel

Depending on configuration, please supply data according to "**Table: unit type code designation ...“** – see below.

Model size	1	2	3	4
A (mm)	470	566	694	854
B (mm)	491	587	715	875
Weight (kg) approx.	6,5	8,2	11,5	15,1

Table: Product type code for mixed-air modules and fresh air blocking damper depends on the actuator

Z H # . 2 # # 0	–	with actuator provided by others (shaft diameter = 15.5 mm)
Z H # . 2 # # 1	–	Manual adjustment
Z H # . 2 # # 2	–	Actuator 230 V open/close

Notice!
For this model you must check on-site whether the standard actuator can be used. If necessary, order actuator 2##0 and use a suitable actuator or order actuator 2##1.

Rectangular duct 1000

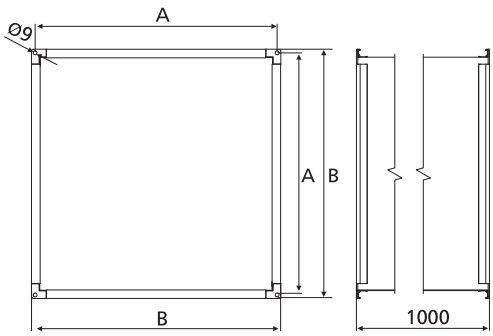

Fig. 33: Rectangular duct 1000 mm

Connection with a peripheral run-around mounting frame, installation length 1000 mm

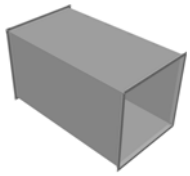

Z H # . 2 7 1 0 – made of stainless steel

Model size	1	2	3	4
A (mm)	470	566	694	854
B (mm)	487	583	711	871
Weight (kg)	12.5	15	18.3	22.4

Flange width = 20 mm

Duct bend 90°, symmetrical

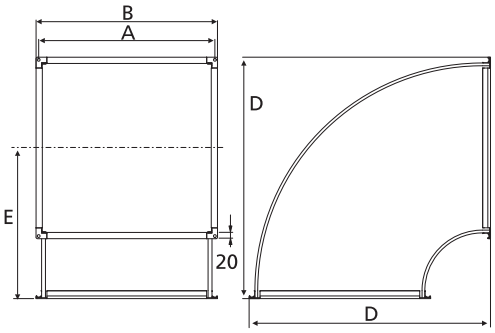

Fig. 34: Duct bend 90°, symmetrical

90° symmetrical, tapered with run-around mounting frame

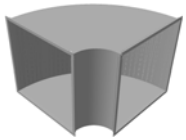

Z H # . 2 8 1 0 – made of stainless steel

Model size	1	2	3	4
A (mm)	470	566	694	854
B (mm)	487	583	711	871
D (mm)	646	742	871	1030
E (mm)	403	451	515	595
Weight (kg)	7.3	11.5	19.3	33

Flange width = 20 mm

Duct bend 90°, asymmetrical

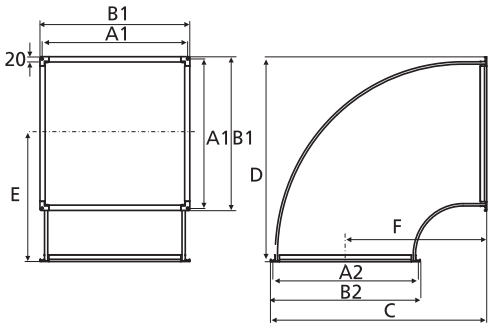

Fig. 35: Duct bend 90°, asymmetrical

90° asymmetrical, tapered run-around mounting frame

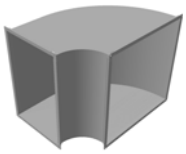

Z H # . 2 9 1 0 – made of stainless steel

Model size	1	2	3	4
A1 (mm)	470	566	694	854
A2 (mm)	363	363	473	473
B1 (mm)	487	583	711	871
B2 (mm)	380	380	490	490
C (mm)	540	540	650	650
D (mm)	646	742	871	1030
E (mm)	403	451	515	595
F (mm)	350	350	405	405
Weight (kg)	7,3	11,5	19,3	33

Flange width = 20 mm

External weather grille

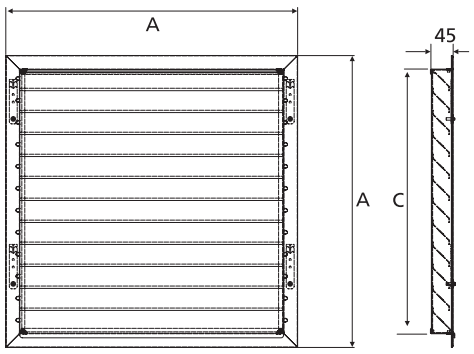

Fig. 36: Weather protection grilles

Made of metal sheet with bird protection grille and removeable wall bracket

Z H # . 3 2 0 0 – Overall depth 45 mm

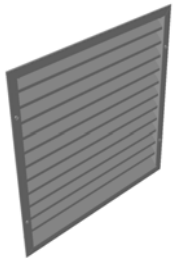

Model size	1	2	3	4
A (mm)	496	592	720	880
C (mm)	438	534	662	822
Weight (kg)	3.7	5.2	7.7	11.5

Wall air-intake hood

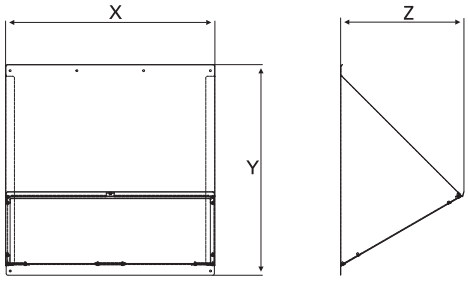

Fig. 37: Wall air-intake hood

Weather protection in RAL 7000 varnished steel sheet with bird protection grille

Z H # . 3 1 0 0 – low pressure drop

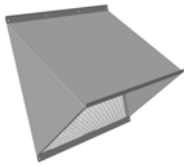

Model size	1	2	3	4
X (mm)	496	592	720	880
y (mm)	500	596	724	884
Z (mm)	288	350	430	532
Weight (kg)	2.8	3.9	5.8	8.6

Frame for wall connection

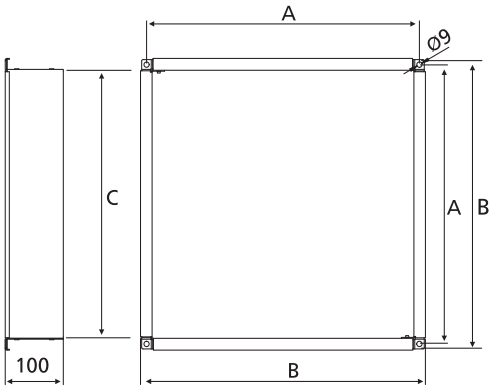

Fig. 38: Frame for wall connection

As spacer for wall opening

Z H # . 5 1 1 0 – made of stainless steel

Model size	1	2	3	4
A (mm)	470	566	694	854
B (mm)	491	587	715	875
C (mm)	451	547	675	835
Weight (kg)	2.6	3.1	3.9	4.8

Flange width = 20 mm

Roof air-intake hood

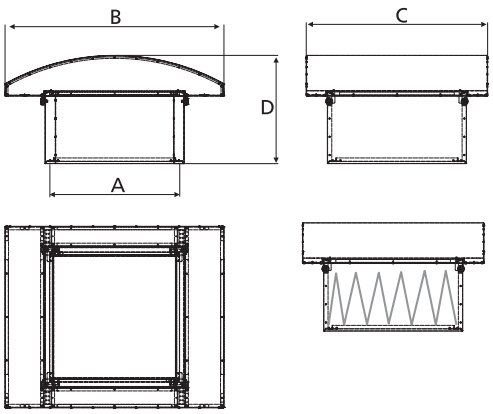

Fig. 39: Roof air intake hood optionally with a bag filter module

Made of metal sheet in RAL 9002 with bird protection grille; other colours on request; **optionally** with **bag filter** (quality class G4 as of DIN EN 779), then the hood can be tilted at 90° for easier filter replacement

Z H # . 3 5 0 0	–	Without filter unit
Z H # . 3 5 0 2	–	with G2 filter
Z H # . 3 5 0 4	–	with G4 filter

Model size	1	2	3	4
A (mm)	490	730	730	1050
B (mm)	970	1260	1260	1700
C (mm)	800	1044	1044	1500
D (mm)	569	623	623	712
Weight (kg)	24.5	39.5	39.5	78

Spare filter:

Z H # . 3 8 0 2	–	Filter G2
Z H # . 3 8 0 4	–	Filter G4

Roof duct with flat roof-duct base

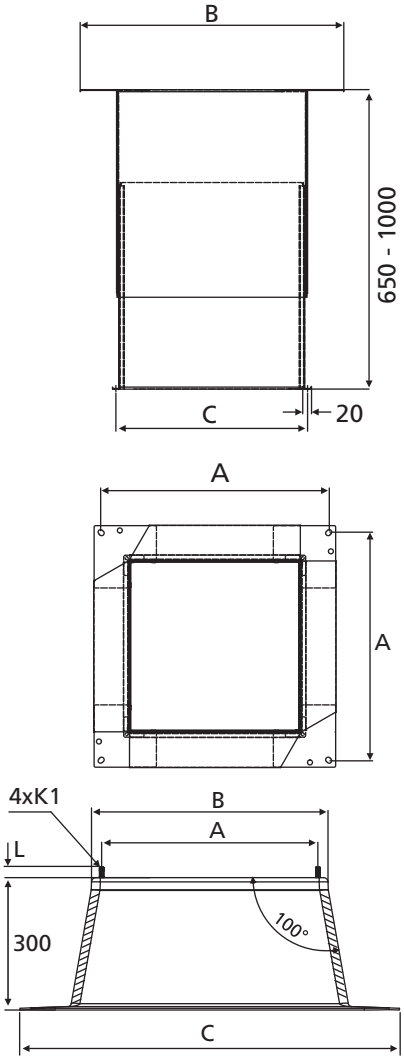

Fig. 40: Roof opening with flat roof plinth

Roof duct performed in galvanized metal sheet including mounting brackets with run-around mounting frame, including°flat roof-duct base, thermally insulated

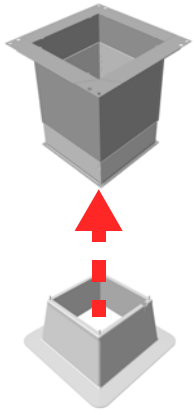

Z H # . 4 9 0 0

Model size	1	2	3	4
A (mm)	490	730	730	1050
B (mm)	536	775	775	1095
C (mm)	470	566	694	854
D (mm)	536	775	775	1095
E (mm)	860	1100	1100	1420
Weight (k) roof duct	15.6	19.2	23.7	29.4
Weight (kg) flat roof-duct base	8	10	10	13
K 1xL (mm)	M10x22	M12x27	M12x27	M12x27

Duct through slanted roof

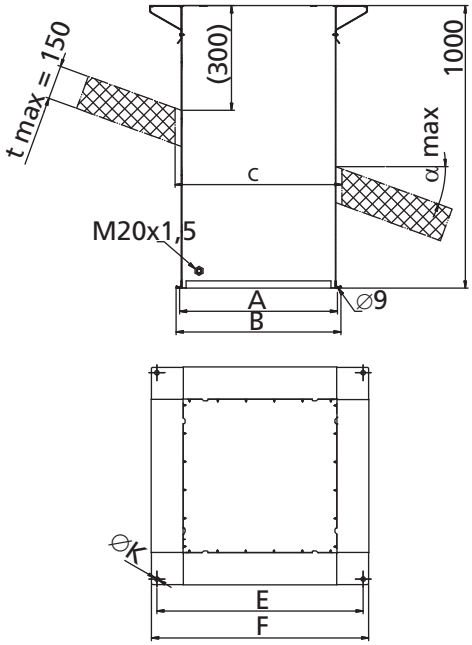

Fig. 41: Duct through slanted roof

Performed in galvanized metal sheet, including mounting bracket with a peripheral run-around mounting frame

ZH#.3400

Model size	1	2	3	4
A (mm)	470	566	694	854
B (mm)	487	583	711	871
C (mm)	530	630	760	920
E (mm)	490	730	730	1050
F (mm)	528	768	768	1088
K (mm)	12	16	16	16
a max	50°	45°	40°	35°

Suspensions

Suspension type compact C

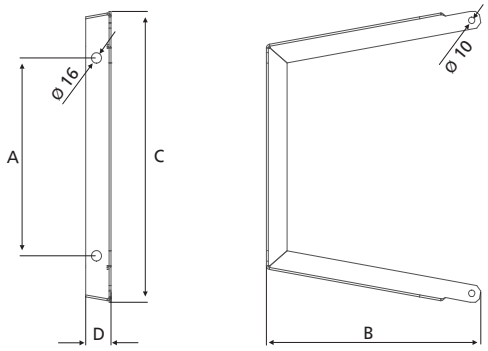

Fig. 42: Suspension type compact C

For recirculating-air nuints, wall and ceiling installation

ZH#.5310 – made of stainless steel

Model size	1	2	3	4
A (mm)	303	389	484	628
B (mm)	340	392	504	578
C (mm)	445	544	680	845
D (mm)	40	40	50	62
Weight (kg)	2.9	3.9	8.2	12.2
X (mm)	414	510	628	776

Ceiling suspension

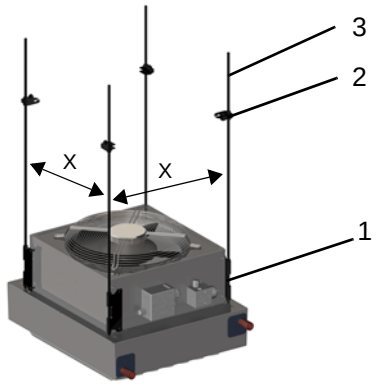

Fig. 43: Ceiling suspension

comprising 4 unit mounting brackets (1) including fixing material for optional accessories (2) and 4 threaded rods (3); made of stainless steel; for ceiling mounting.

Threaded rods M10 can be supplied in different lengths and have the following accessory code designations:

ZH# 5610 – Installation without threaded rod - 3.3 kg
ZH#.5611 – Threaded rod 1 m - 5.7 kg
ZH#.5612 – Threaded rod 2 m - 8.1 kg
ZH#.5613 – Threaded rod 3 m - 10.5 kg

Model size	1	2	3	4
X (mm)	531	627	755	915

Modular type suspension

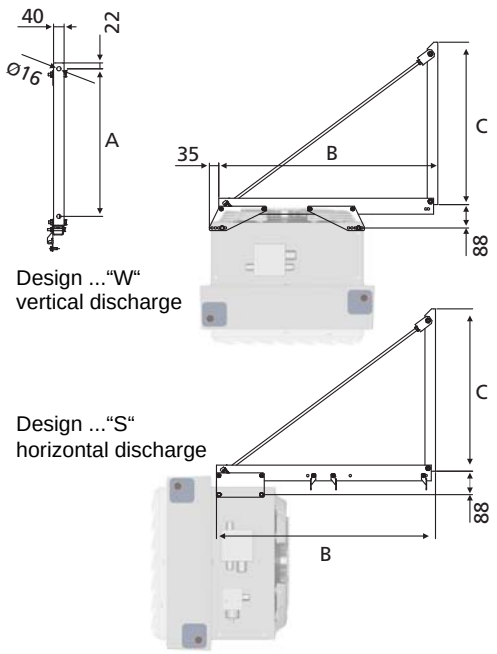

comprising brackets made of stainless steel; mounting rails with threaded rods and tensioning locks Wall mounting using steel brackets, suitable for all heat exchanger models

W – vertical unit outlet
S – horizontal unit outlet

Z	H	#	.	5	5	1	-

– Wall mounting, stainless steel

Model size	1	2	3	4
X (mm)	414	510	638	798

Fig. 44: Modular type suspension

Z	H	#	.	5	5	1	0	1	2	4	5	7	8	A	C	W
		Model size					**Structure of accessories**									
							without accessories	25+20+51	25+36+20+51	25+21+29+51	25+36+21+29+51	25+23+51	25+36+23+51	26+36	25+28 (+49...)	without accessories for vertical discharge
							Modular Type 55 type code									
		1					5S	7S	11S	9S	13S	5S	9S	10S	10S	7W
		2					6S	7S	11S	9S	13S	5S	9S	11S	11S	8W
		3					7S	8S	12S	10S	14S	5S	9S	12S	12S	9W
		4					8S	8S	12S	10S	14S	5S	9S	12S	14S	11W

Use number or letter in the last position of the accessories code.

Type code	5S	6S	7S/7W	8S/8W	9S/9W	10S	11S/11W	12S	13S	14S
A (mm)	386	386	386	556	556	556	556	556	656	656
B (mm)	505	605	715	825	935	1045	1155	1265	1375	1485
C (mm)	442	442	442	612	612	612	612	612	712	712
Weight (kg)	7.5	8.3	9.3	11.2	12.1	12.9	13.9	15	16.1	17

Tab. 2

Control unit MC4 for units with AC motor

- Plastic housing in RAL 9016, intended for wall mounting
- Protection class IP 65
- Max. Switch rating 3.8 kW
- Max. Current 9A
- Full electronic motor fan protection
- Frost protection during mixed air operation
- Units controlled individually or in groups (max. 4 air heaters))
- Dimensions (W x H x D): 170 x 223 x 85 mm
  170 x 223 x 107 mm per MC4##AC.#K#
- Connection options:
  - Room/contact thermostat or external ON/OFF contact
  - Shut-off valve with one 230 V actuator
  - Mixed-air box servo drive 230 V (MC4##AC.#K#)
  - Differential pressure switch (MC4##AC.##F)

			Motor / speed stages	Control unit type	Thermostats
Recirculating air	Heating only		2-speed, AC motor, 3 x 400 V	MC4U2AC.000, MC4U2AC.00F	Room thermostat 902.113 or Room thermostat 902110
Mixed air	Heating only		2-speed, AC motor, 3 x 400 V	MC4M2AC.0KF	

	Control unit type	AC motor	Description of basic functions (MC4U#AC.000)	Additional functions	Description of the additional functions
Recirculating-air mode	MC4U2AC	2-speed, 3 x 400 V	– ON/OFF with signaling – Signaling - Motor fan fault – Output: contact heating valve 230V AC, open/closed – Output: Signaling TK OK / TK ERROR+OFF (NC/NO contact) – Output: Control ISYteq 1-2-3-OFF (NC/NO contact) – ON/OFF - Motorized fan with operation signalling – Input: Door contact 230V AC or contact ON/OFF 230V AC or room thermostat 230 V AC	MC4U2AC.00F	Signaling the filter contamination.

	Control unit type	AC motor	Description of basic functions (MC4M#AC.OKF)
Mixed-air operation	MC4M2AC	2-speed, 3 x 400 V	– ON/OFF with signaling – ON/OFF - Motorized fan with operation signaling – Signaling - Motor fan fault – Output: contact heating valve 230V AC, open/closed – Output: Signaling TK OK / TK ERROR+OFF (NC/NO contact) – Output: Control ISYteq 1-2-3-OFF (NC/NO contact) – ON/OFF - Motorized fan with operation signaling – Signaling the filter contamination.

Intermediate terminal box

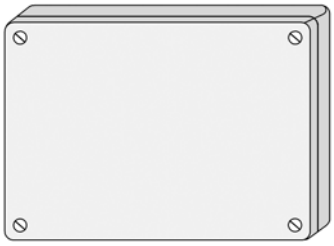

Intermediate terminal box for connecting a maximum of 4 air-handling units:

– Plastic casing for on-wall mounting with sufficient space for loop-in wiring
– Protection class:IP 54
– Row terminals:2.5 mm^2
– Dimensions W x H x D: 270 x 220 x 105 mm

Operating mode	Motor design/motor mode	Terminal box type
Recirculating air	400 V 2-speed	981860
Mixed air	400 V 2-speed	981865

FläktGroup industrial thermostats

Measurement of room temperature, with plastic casing and closed capillary system:

– Setpoint range: 0 ... 60 °C
– Sensor coil:copper nickel-plated
– Protection class:IP 54
– Switching difference:1.5 +/- 1 K
– Output:change-over contact 15 ohm. 8 A ind. 250 V
– Dimension H x W x D: 135 x 96 x 87 mm

Type: 902113

FläktGroup contact temperature thermostat

For changing between “heating” and “cooling”; supplied in an enclosed casing with adjustable switching point:

– Adjustment range: 10 ... 40 °C
– Protection class: IP 54
– Switching difference: 10 K
– Output:change-over contact 4 A ohm. 2 A ind. 250 V
– Dimension H x W x D: 79 x 50 x 55 mm

Type: 902135

FläktGroup programmable room thermostat 902110

For regulating the unit due to the measured room temperature

Day/Night mode, week program, 2x battery AA

- Setpoint range: +5 ... 35 °C
- Ambient temperature: 0 ... 45°C
- Protection class: IP 30
- Outlet: 230 V AC: 0.5 - 5 A ohmic, 0.5 - 3 A inductive,
  24 V AC: 0.5 - 5 A ohmic, 0,5 - 3 A inductive
- Dimension (W x H x D):136 x 97 x 26 mm

Unit group with FläktGroup Multi*MAXX* HS mixed-air units with MC4 control unit

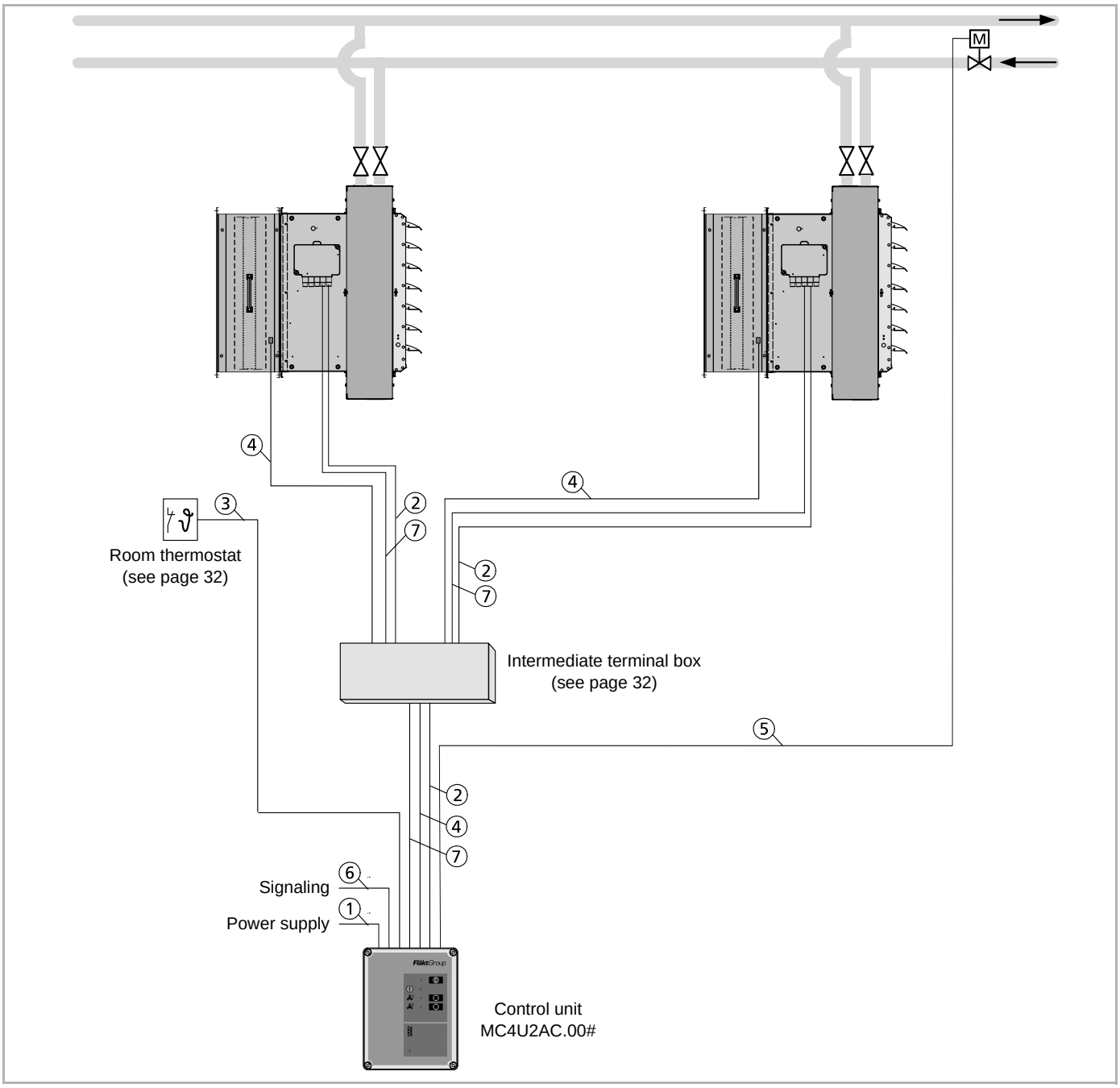

Fig. 44: Unit group with FläktGroup MultiMAXX HS mixed-air units with MC4 control unit

Required number of wires

Control unit	**MC4U2AC.000** 3x400V	**MC4U2AC.00F** 3x400V
Cable 1 (Power supply)	5	5
Cable 2 (Fan motor)	7	7
Cable 3 (Room thermostat)	3	3
Cable 4 (Filter)	-	2
Cable 5 (Valve)	2	2
Cable 6 (Signaling)	3	6
Cable 7* (Thermal contact)	2	2

** Shielded cable*

Unit group with FläktGroup Multi*MAXX* HS mixed-air units with MC4 control unit

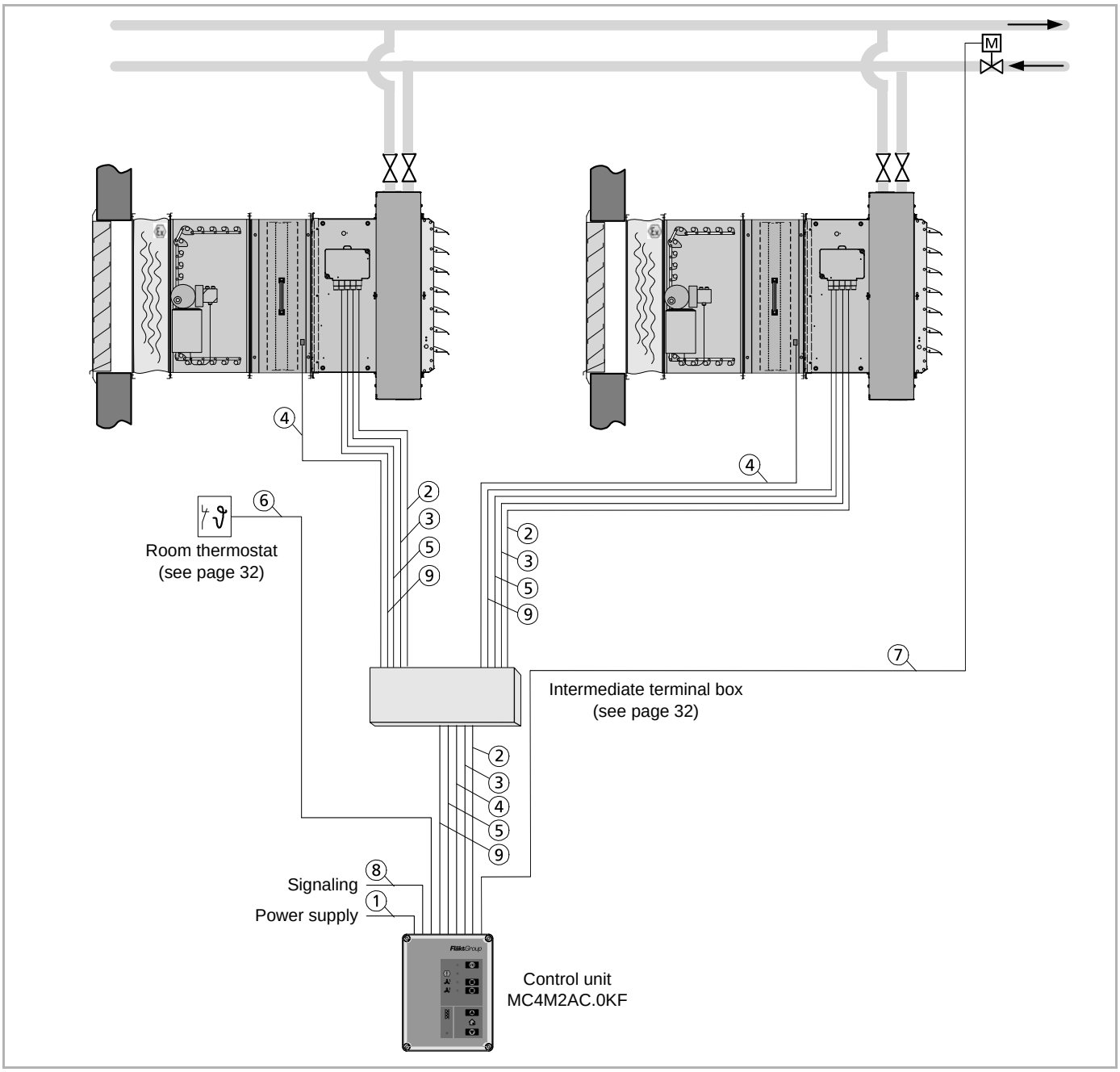

Fig. 45: Unit group with FläktGroup MultiMAXX HS mixed-air units with MC4 control unit

Required number of wires

Control unit	**MC4M2AC.0KF** 3x400V
Cable 1 (Power supply)	5
Cable 2 (Frost protection)	5
Cable 3 (Fan motor)	7
Cable 4 (Filter)	2
Cable 5 (Mixed-air module)	3
Cable 6 (Thermostat)	3
Cable 7 (Valve)	2
Cable 8 (Signaling)	6
Cable 9* (Thermal contact)	2

** Shielded cable*

FläktGroup MATRIX 2000

System features:

- Temperature assignment.: 7...40 °C
- Assignment of fan speed
- Adjustable regulating range
- Change-over between normal/economy mode on control panel
- Room temperature measurement using room sensor
- Valve control (2 or 3 point)
- Temperature control via fan and/or valve
- Room frost protection
- Status messages using LED
- Group control
- Group switch-off switch-off in case of fault
- Temperature monitoring of motor (TC required)
- Network-enabled

MATRIX OP21I

Control panel for MATRIX 2000

- Casing in light grey, IP54 protection
- Setpoint temperature setting
- Fan speed selection switch 0 - A (auto) - 1 - 2 - 3
- Economy mode button
- LEDs for operation/fault/ext.control
- Connection for external room sensor

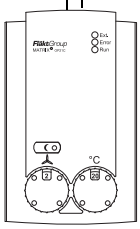

G

FläktGroup MATRIX 3000/4000

System features MATRIX 3000

- Temperature assignment.: 7...40 °C
- Assignment of fan speed
- Adjustable regulating range
- Change-over between normal/economy mode on control panel
- Input for change-over between normal/economy mode or unit OFF with frost protection
- Room temperature measurement using room sensor
- Valve control (2 or 3 point) or secondary-air louvre control
- Temperature control via fan and/or valve
- Room frost protection
- Status messages using LED
- Status and alarm signal via volt free change-over contacts
- Unit individual and group control
- Isolation of individual units in case of fault
- Motor temperature monitoring (TC required)
- Network-enabled

Additional features MATRIX 4000:

- Summer and winter compensation
- Valve control/secondary-air louvre control
- Cool and/or heat request via volt-free contacts (related to water circuit)
- Stand alone unit control
- Inputs for operating mode:
  - Normal mode
  - Economy mode
  - Autonomous mode
  - Unit OFF

MATRIX OP31I

Control panel for MATRIX 3000/4000

- Casing in light grey, IP54 protection
- Setpoint temperature setting
- Fan speed selection switch 0 - A (auto) - 1 - 2 - 3
- LEDs for operation/fault/ext.control
- Connection for external room sensor
- Normal/economy mode buttons

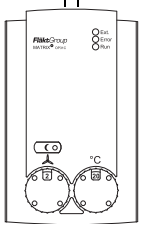

I

MATRIX OP44I

As for control panel OP31C, but also with button for:

- Changeover between recirculating-air / mixed-air operation

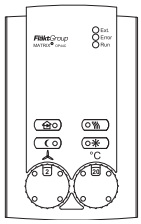

K

MATRIX OP50I

Control panel for MATRIX 3000/4000

- Casing in light grey, IP54 protection
- Menu-guided controls using rotation navigator
- LCD display with plain-text display
- Status messages using pictograms
- Connection for external room sensor

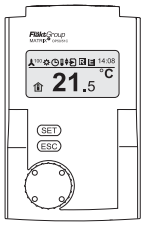

L

MATRIX OP51I

As for control panel OP50I, but also with:

- Integrated weekly clock timer with a holiday and special days programme

M

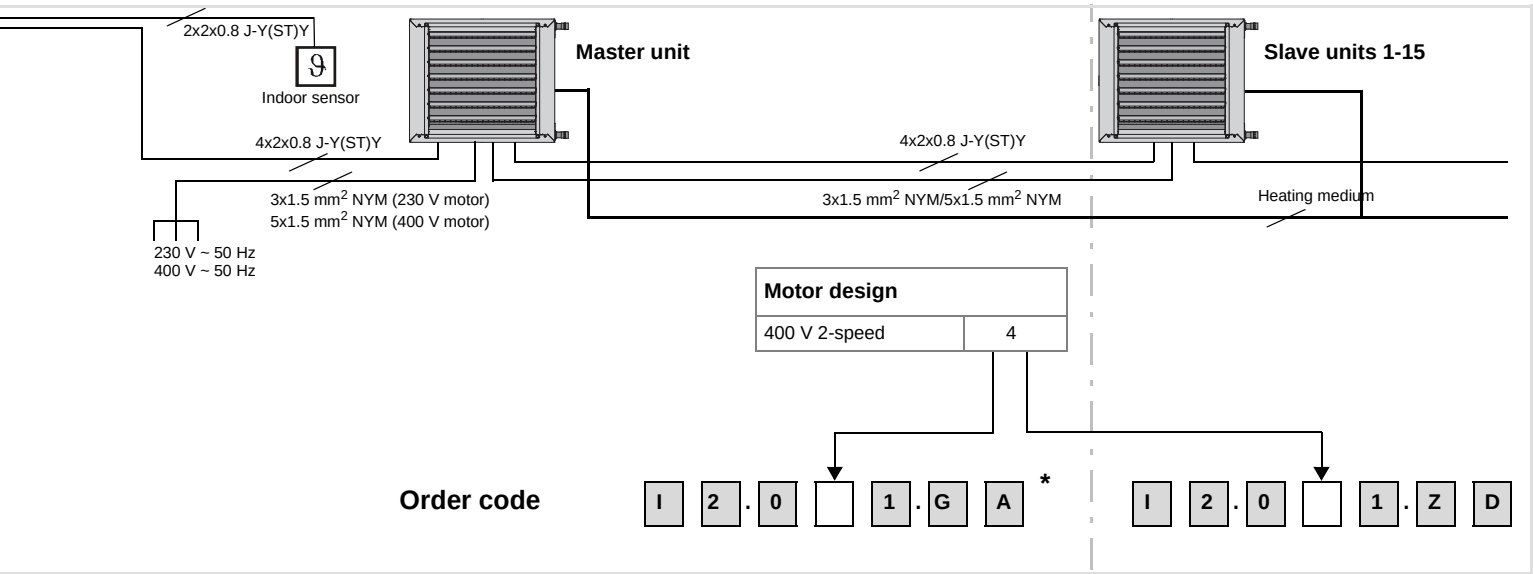

Motor design	
400 V 2-speed	4

Order code I 2 . 0 ☐ 1 . G A * | I 2 . 0 ☐ 1 . Z D

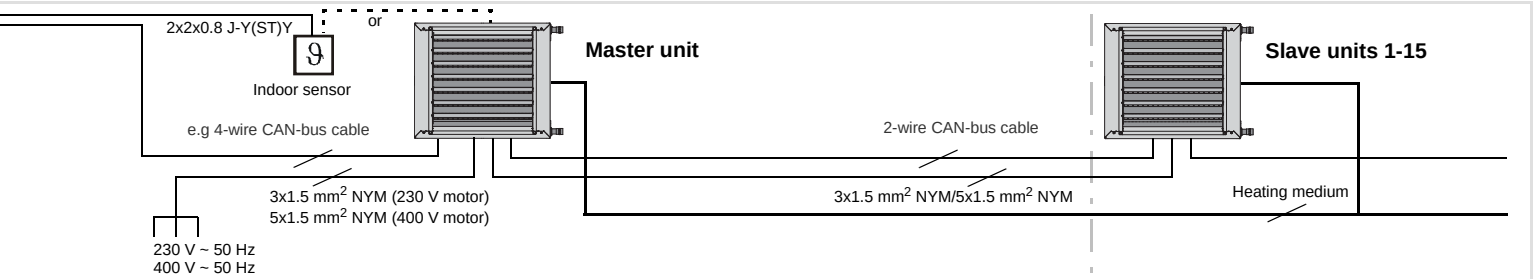

Stand-alone unit regulation with status and error messages	Group regulation with status and error messages	Input for gate contact	Input for economy contact	Input for unit switch off without frost protection monitoring	Filter monitoring		Motor design: 0	Motor design: 4	Motor design: 400 V 2-speed	Motor design: 0	Motor design: 4
	•	•				3	1		2		1
	•		•			3	2		2		1
•		•				3	1		3		1
•			•			3	2		3		2
•		•				3	3		3		3
•			•			3	4		3		4
•		•				3	5		3		5
•			•			3	6		3		6
•		•			•	4	1		4		1
•			•		•	4	2		4		2
•		•	•	•	•	4	3		4		3
•		•			•	4	4		4		4
•			•		•	4	5		4		5
•		•	•	•	•	4	6		4		6
•		•			•	4	7		4		7
•			•		•	4	8		4		8
•		•	•	•	•	4	9		4		9

→ Control panel

Order code I ☐ . ☐ ☐ ☐ . ☐ A * | I ☐ . ☐ ☐ ☐ . Z D

* Controller package comprises a room sensor 903.454

FläktGroup MATRIX 2000/3000

not applicable

FläktGroup MATRIX 4000

System features MATRIX 4000

- Temperature assignment.: 7...40 °C
- Assignment of fan speed
- Adjustable regulating range
- Change-over between normal/economy mode on control panel
- Input for change-over between normal/economy mode or unit OFF with frost protection
- Room temperature measurement using room sensor
- Valve control (2 or 3 point)
- Temperature control via fan and/or valve or control of secondary-air louvre
- Room frost protection
- Status messages using LED
- Status and alarm signal via volt free change-over contacts
- Unit individual and group control
- Isolation of individual units in case of fault
- Motor temperature monitoring (TC required)
- Network-enabled
- Summer and winter compensation
- Valve control/secondary-air louvre control
- Heat request via volt-free contact (related to water circuit)
- Stand alone unit control
- Inputs for operating mode:
  - Normal mode
  - Economy mode
  - Autonomous mode
  - Unit OFF

MATRIX OP31I

Control panel for MATRIX 4000
- Casing in light grey, IP54 protection
- Setpoint temperature setting
- Fan speed selection switch 0 - A (auto) - 1 - 2 - 3
- LEDs for operation/fault/ext.control
- Connection for external room sensor
- Normal/economy mode buttons

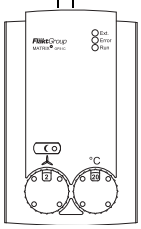

MATRIX OP44I

As for control panel OP31C, but also with button for:
- Changeover between recirculating-air/mixed-air operation

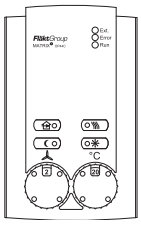

MATRIX OP50I

Control panel for MATRIX 4000
- Casing in light grey, IP54 protection
- Menu-guided controls using rotation navigator
- LCD display with plain-text display
- Status messages using pictograms
- Connection for external room sensor

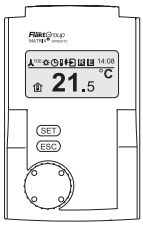

MATRIX OP51I

As for control panel OP50I, but also with:
- Integrated weekly clock timer with a holiday and special days programme

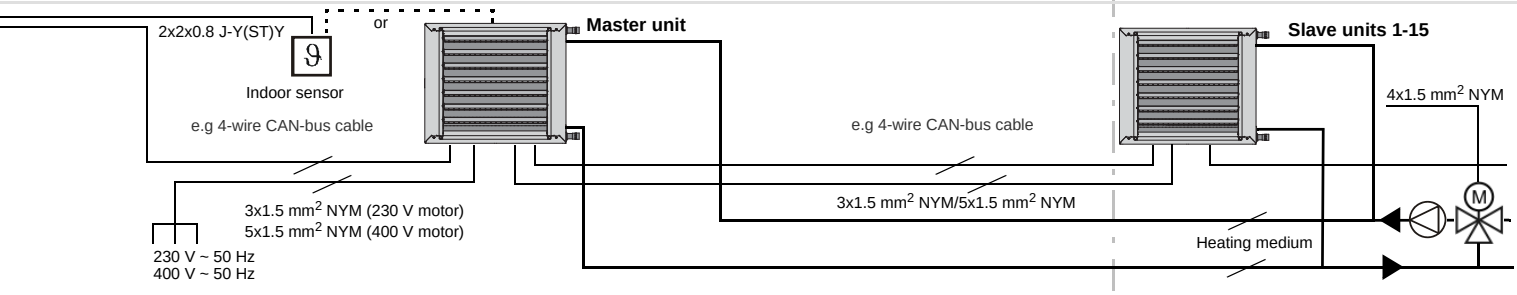

Stand-alone unit regulation with status and error messages	Damper control open/close	Continuous damper control	Control of external group valve	Min/Max limitation	Input for gate contact	Input for economy contact	Input for unit switch off without frost protection monitoring	Output for heat request	Filter monitoring	Motor design 4 0 400 V 2-speed 4 0	
•		•			•				•	1	1
•		•				•			•	2	2
•		•			•	•	•	•	•	3	3
•		•			•				•	4	4
•		•				•			•	5	5
•		•			•	•	•	•	•	6	6
•		•			•				•	7	7
•		•				•			•	8	8
•		•			•	•	•	•	•	9	9

Stand-alone unit regulation with status and error messag-	Damper control open/close	Continuous damper control	Control of external group valve	Min/Max limitation	Input for gate contact	Input for economy contact	Input for unit switch off without frost protection monitoring	Output for heat request	Filter monitoring	Motor design 4 2 400 V 2-speed 4 0	
•		•	•		•	•	•	•	•	1	3
•		•	•		•	•	•	•	•	2	6
•		•	•		•	•	•	•	•	3	9
•		•	•	•	•	•	•	•	•	4	3
•		•	•	•	•	•	•	•	•	5	6
•		•	•	•	•	•	•	•	•	6	9

Control panel

Order code I 4 . ☐ ☐ ☐ . ☐ A * I 4 . ☐ ☐ ☐ . Z D

* Controller package comprises a room sensor 903.454

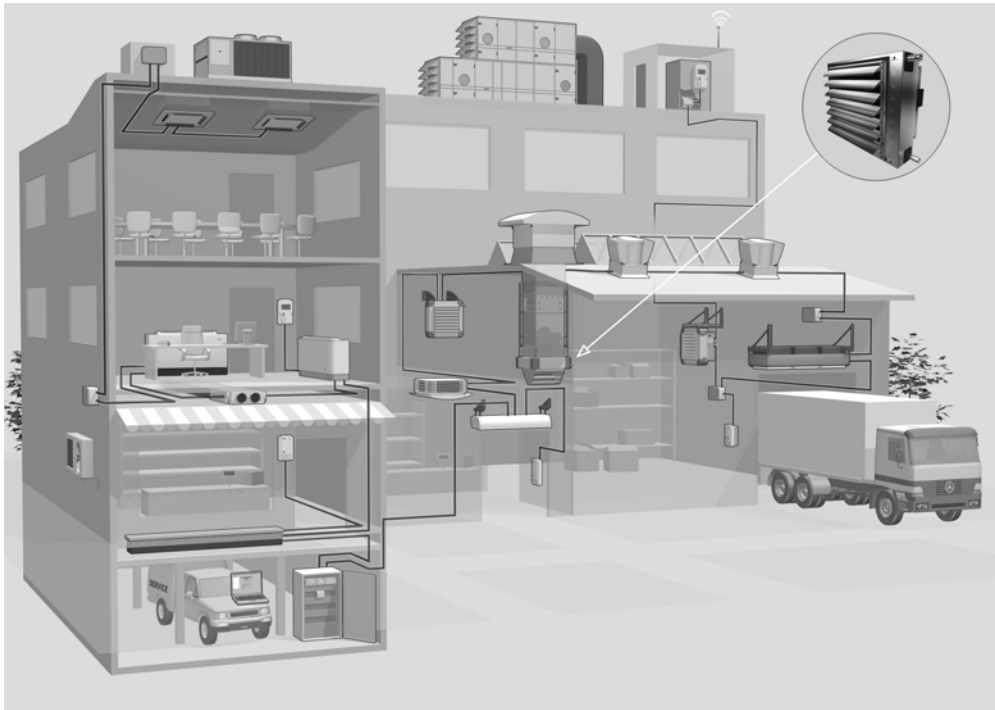

MATRIX 2000

MATRIX 2000 control system supports all basic functions (heating/cooling) of recirculating-air unit heaters.
The controller can be used in the following unit types:
– 2-pipe units "only heating"

Fan control is performed automatically depending on the difference between actual temperature reading and the setpoint. The speed can be set manually and the unit (with frost protection) switched off via the control panel. Additionally, the MATRIX 2000 allows you to monitor the fan motor via thermal contacts with external leads as well as the condensate water level for cooling units with a condensate pump.

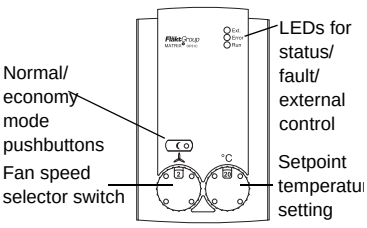

The OP21 control panel enables the setpoint values to be set quickly and easily without extensive prior experience. Mechanical limiters can be used to confine the setting range for the setpoint temperature and fan speed. Room temperature is measured via an external sensor (can be connected directly to the control panel). System faults are signaled centrally via the red “malfunction” LED. If economy mode is activated, it is displayed via the yellow LED integrated into the button.

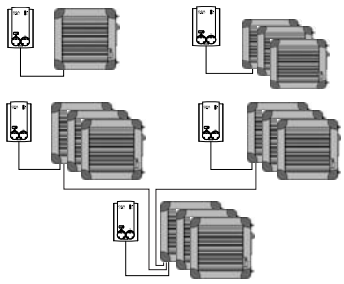

For control of industrial unit heaters an IP54 control panel (OP21 I) is used.

The connection in the unit is made via plug-in cage clamps. Electronic components, fans and valves (230 V) are fused separately via two micro-fuses at the power unit. A pre-fuse B 10 A must be provided for circuit protection.

The MATRIX 2000 can be used for controlling individual recirculating-air units and recirculating-air unit groups as well. The integrated bus system MATRIX.Net enables integration of up to 16 several groups in one Network. The combination with MATRIX 3000 controllers and connection of Global Modules and communication interfaces is also possible.

MATRIX 3000

The MATRIX 3000 control system is based on the MATRIX 2000 system and provides the following additional functions.

Status and alarm signals are relayed via two change-over contacts on the unit. The maximum load on the contacts at 230 V AC is 4 A ohmic / 2 A inductive.

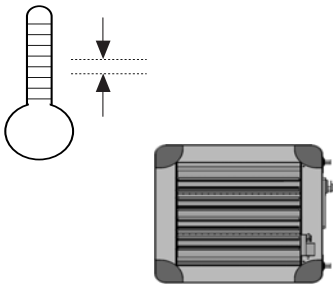

The supply air temperature can be limited for heating. Fixed and sliding limits can be defined.

An external temperature sensor or return air sensor can be connected to all system types (directly connected to controller).

An additional control input enables the following operating modes that can be set externally:

– Normal/economy operation or
– Unit OFF with frost protection or
– Input for gate contact (unit with pre-set fan speed, time delay with closing gate)

Various types of control panels are available. The range varies from a simple variant with setpoint temperature and fan operating mode selection using infrared remote control to a control panel with display. The display unit can also be supplied with an integrated weekly timer.

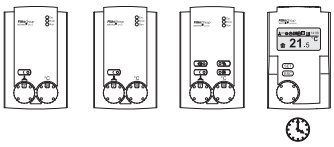

MATRIX 4000

The MATRIX 4000 control system is based on the MATRIX 2000/3000 systems and provides the following additional functions. These features are described as follows:

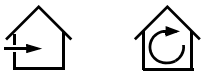

Regulation of mixing-air damper is enabled with mixed-air units. At the same time, a sensor above the coil monitors frost protection. In addition to the mixing-air damper function, a relay output reports the mixed-air operating status. The relay output can be used to control an extract fan.

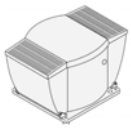

A modulating valve at a supply voltage of 24 V or 230 V AC can be used to control the heating or cooling capacity.

In order to provide enhanced selection within heating/cooling duty range, continuous (EC) fan motor control is enabled.

For applications with highest comfort requirements electronic control elements provide absolutely silent control of the secondary-air louvre.

Four additional control inputs enable external assignment of these operating modes:

– Normal operation
– Economy mode
– Free mode
– Unit OFF with frost protection.

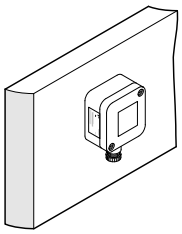

It is also possible to connect the outdoor sensor for activation of summer compensation. Outdoor air temperature reading is automatically transmitted to all units connected within the MATRIX.Net.

The MATRIX 4000 can be used for controlling individual recirculating-air and mixed-air units and also recirculating-air unit groups. It is permitted to use recirculating and mixed-air units together within one group.

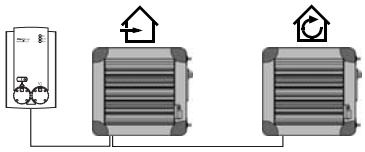

Performance characteristics		MATRIX 2000	MATRIX 3000	MATRIX 4000
Unit type	2-pipe systems "only heating"	✓	✓	✓
Fan	up to 3 speeds (3 x 400 V)	✓	✓	✓
	Temperature-dependent fan control	✓	✓	✓
	Motor monitoring with external thermal contact	✓	✓	✓
Valve control	1 x 3-point			✓
Frost Protection	Indoor anti-freeze protection	✓	✓	✓
	Unit anti-freeze protection			✓
Summer/Winter compensation		✓	✓	✓
Supply temperature limitation	Min/Max limitation for heating		✓	✓
Control inputs	Economy mode or gate/window contact	✓**	✓	✓
	Economy mode, gate/window contact, unit OFF, autonomous operating mode	✓**	✓**	✓
Measuring outside temperature	via local sensor connection			✓
	using MATRIX.AI	✓	✓	✓
Measuring inlet temperature	via local sensor connection	✓**	✓	✓
Measuring return air temperature	via local sensor connection	✓	✓	✓
Measuring supply air temperature	via local sensor connection		✓	✓
Connection for filter monitoring	via local sensor connection			✓
Messages	Status signal via change-over contact		✓	✓
	Fault signal via change-over contact		✓	✓
Mixing-air damper control	Open/close or continuous 0-100 %			✓
Exhaust fan control	1 speed via relay output			✓
	via power unit / extract fan controller	✓	✓	✓
Control modes	Room temperature control	✓	✓	✓
	Supply-air temperature control		✓	✓
	Cascade room-supply air temperature control/displacement ventilation		✓	✓
MATRIX.Net bus system		✓	✓	✓
can be extended by:	MATRIX.DI	✓	✓	✓
	MATRIX.AI	✓	✓	✓
	MATRIX.DO	✓	✓	✓
	MATRIX.V	✓	✓	✓
	MATRIX.EM		✓	✓
	MATRIX.LON	✓	✓	✓
	MATRIX.WEB	✓	✓	✓
Service tools	MATRIX.PC	✓	✓	✓
Control panels	MATRIX OP21I	✓		
	MATRIX OP31I		✓	✓
	MATRIX OP44I		✓	✓
	MATRIX OP50#/51I		✓	✓
	MATRIX OP71I	✓	✓	✓

* only for slave units
** only with add-on module

Line lengths

Regardless of the cross-section and the number of users, the maximum line length including branch feeders must not exceed 600 m.

The branch feeder must not exceed 25 m. The total length of all branch feeders may not exceed a maximum 150 m.

RECOMMENDATION
Use bridges in the network if there are more than 110 users. To extend the line length, use special jumpers to decouple running times of telegrams between the network participants.

Change the cross-section of the bus cable depending on the MATRIX.net cable length!

Line length	Line Type
up to 50 m	2 x 2 x 0.22 mm² * 1 x 2 x 0.22 mm²
up to 600 m	2 x 2 x 0.5 mm² * 1 x 2 x 0.5 mm²
**Contains 2 wires for power supply to control panels or modules.*	

MATRIX.LON module

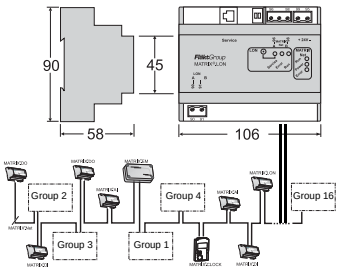

The MATRIX.LON communication module is part of the global modules of the FläktGroup MATRIX control system and is used for connecting the MATRIX control system to a network structure in accordance with the LON WORKS standard. It enables to connect HVAC equipment to a building management system or other building service systems. The modules also enables external systems such as louvres or lighting systems to be regulated via the MATRIX OP50/51 control panel. The module can be integrated at any point within the MATRIX network. A maximum of 16 FläktGroup MATRIX.LON modules can be used within one MATRIX network.

Technical data:

Power supply	24 V DC ± 15 %
PROTECTION RATING	IP 20
Nominal current consumption	0.03 A
Dimensions	106 mm x 90 mm x 58 mm
Operating temperature	0 to +45 °C
Fusing	10 AT
Mounting	Mounting rail

MATRIX.DI digital input module

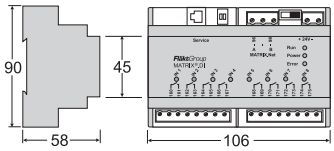

The MATRIX.DI digital input module is one of the global modules of the FläktGroup MATRIX control system and is used as input for digital control signals. Thus, the control system can be regulated by external systems. The module can be integrated at any point within the MATRIX network. A maximum of 2 MATRIX.DI modules may be operated in one network at the same time.

The module is fitted with 8 independent digital inputs regulated by volt free contacts. LEDs indicate the current input state. Settings made via the DI module have priority over the settings of the local control panel. The module can be used to specify the following functions and operating modes:

– HVAC mode (heating/cooling/automatic)
– Normal/economy mode
– Fan speed (1/2/3/4/5/Auto/Mute)
– Activate mixed-air operation
– Unit OFF with frost protection
– Activate controller parameters

The module is supplied with the default factory configuration. Configurations with other settings can be performed using the MATRIX.PC service software. In such a way assignment of input functions and their free allocation to group(s) can be carried out.

Technical data:

Power supply	24 V DC ± 15 %
PROTECTION RATING	IP 20
max. current consumption	0.1 A
Dimensions	106 mm x 90 mm x 58 mm
Operating temperature	0 to +45 °C
Fusing	10 AT
Mounting	Mounting rail

Factory-made configuration:

Input	**valid for**	**Closed contact results in:**
1	All groups	HVAC Mode Heating
2	All groups	HVAC Mode Cooling
3	All groups	Normal operation
4	All groups	Economy mode
5	Group 0	Fan in speed 3
6	–	–
7	–	–
8	Group 0	Active mixed-air operation

Digital output module MATRIX.DO

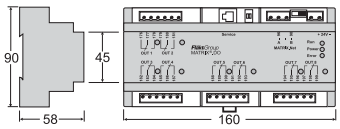

The MATRIX.DO digital output module is one of the global modules of the FläktGroup MATRIX control system and is used for signal output from the MATRIX system. Thus the module enables to send messages and operating states to external systems. The module can be integrated anywhere within the MATRIX network. A maximum of 2 MATRIX.DO modules may be operated in one network simultaneously.

The module is fitted with 8 separate digital outputs with volt-free change-over contacts. LEDs indicate the current output status. System component messages and operating states from one or more groups can be sent directly or in conjunction with other operating states. Comparison functions, including arithmetic and timing functions are enabled.

Output of the following messages/operating states comprise:

– Error messages (e.g., motor overheat, frost hazard, sensor error, condensate level too high)
– Current fan speed
– Normal operation/economy operation
– Bypass mode
– Current HVAC mode (heating/cooling/automatic)
– Mixed air/recirculating-air operation
– Active electric heating
– An x number of units are operating in heating or cooling mode

The module is supplied with the default factory configuration. Configurations with other settings can be made using the MATRIX.PC software. Thus assignment of outputs and their free allocation to group(s) can be carried out.

Technical data:

Power supply	24 V DC ± 15 %
PROTECTION RATING	IP 20
max. rated current consumption	0.14 A
Dimensions	160 mm x 90 mm x 58 mm
Operating temperature	0 to +45 °C
Fusing	10 AT
Mounting	Mounting rail
Contact load	250 V/5 A (ohmic); 2 A (inductive)

Factory-made configuration:

Input	**valid for**	**Relay on signals:**
1	All groups	Operation
2	All groups	Fault signal
3	All groups	Frost alarm
4	Group 0	Fault signal
5	Group 1	Fault signal
6	Group 2	Fault signal
7	Group 3	Fault signal
8	Group 4	Fault signal

Analog input module MATRIX.AI

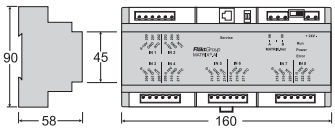

The MATRIX.AI analog input module is one of the global modules of the FläktGroup MATRIX control system and is used as input for analog actual readings and setpoints. Thus it enables the MATRIX control system to be connected to external systems. The module can be integrated at any point within the MATRIX network. A maximum of 2 MATRIX.AI modules may be operated in one network simultaneously.

The module is equipped with 8 independent analog inputs that are controlled using 0…10 V/2...10 V signals or can be fitted with NTC sensors (10 k Ohm/25 °C). Settings made via the AI module have priority over the settings of the local control panel. The following setpoints and actual readings can be set / received using the module.

Actual readings:

– Room, outdoor and inlet temperature
– Outdoor-air humidity
– Indoor CO_2 concentration
– Supply duct pressure and volume flow
– Extract duct pressure and volume flow

Setpoints:

– Room temperature, supply air temperature
– Outside air rate

The module is supplied with the default factory configuration. Configurations with other settings can be made using the MATRIX.PC software. Thus assignment of inputs and their free allocation to group(s) can be carried out. Input voltage range can be selected as well as measuring range of the sensor and a filter value for signal stabilization specified.

Technical data:

Power supply	24 V DC ± 15 %
PROTECTION RATING	IP 20
Nominal current consumption	0.03 A
Dimensions	160 mm x 90 mm x 58 mm
Operating temperature	0 to +45 °C
Fusing	10 AT
Mounting	Mounting rail

Factory-made configuration:

Input	valid for	Parameter	Type	Filter value	Measuring range
1	All groups	Outdoor temperature	NTC	20	–
2	All groups	Inlet temperature	NTC	20	–
3	Group 0	Room air setpoint	0 ... 10 V	20	10 – 35 °C
4	Group 1	Room air setpoint	0 ... 10 V	20	10 – 35 °C
5	Group 2	Room air setpoint	0 ... 10 V	20	10 – 35 °C
6	Group 0	Outside air rate	0 ... 10 V	20	0 ... 100 %
7	Group 1	Outside air rate	0 ... 10 V	20	0 ... 100 %
8	Group 2	Outside air rate	0 ... 10 V	20	0 ... 100 %

MATRIX.V valve module

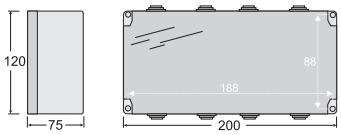

The MATRIX.V valve module is one of the global modules of the FläktGroup MATRIX control system and is used to control group valves, e.g., of unit heaters. The module can be integrated at any point within the MATRIX network. A maximum of 1 module MATRIX.LON can be used for each group. Different drive types of the valves (2-point/ modulating/continuous) and the use in 2- and 4-pipe units are supported, change over systems included.

The module is fitted with the following inputs and outputs:

– analog input to measure supply temperature (NTC sensor 10 k Ohm/25 °C)
– 2 analog outputs (0/2...10 V) for controlling continuous valves
– 4 relay outputs for regulating open/close and modulating (2/3-point) valves
– 2 relay outputs for chilled/warm water demand

The module is supplied with the default factory configuration. Configurations with other settings can be made using the MATRIX.PC software.

Technical data:

Power supply	230 V AC ± 15 %
PROTECTION RATING	IP 54
Nominal current consumption	0.02 A
Dimensions	200 mm x 120 mm x 75 mm
Operating temperature	0 to +45 °C
Fusing	B 10 A
Mounting	4 drill holes 4 mm
Contact load	250 V/5 A (ohmic); 2 A (inductive)

Factory-made configuration:

Unit type	2-pipe heating or cooling
Control type	Room temperature control
Valve type	Modulating (3-point) valve
Pump run-on time, pumped chilled water	1 min
Pump run-on time, pumped warm water	1 min
Maximum valve runtime	150 sec

MATRIX.OP71 control panel for all groups

The MATRIX.OP71 control panel for all groups is designed for operation from one central point. This control panel can be integrated at any location within the MATRIX network and can be simultaneously operated in 16 groups.

Up to 16 unit groups can be assigned to one cluster:
- One unit group per each cluster
- Each cluster to include up to 16 unit groups.

Clear text menus and "push&turn" function enable easy handling during operation or configuration. A maximum of 16 unit groups can be individually grouped to clusters. Using a control panel the desired setpoints for temperature, fan speed, etc. can be assigned for each cluster. Thanks to comprehensive features of the control panel, the necessary room or return air sensors are located in the respective groups (group locations).

Local control panels (OP2##, OP3##, OP4##, OP5#) can be additionally integrated in individual groups. Their functional scope can be defined and adjusted using the control panel for all groups. Thus, a relative daily setpoint can be entered via a local control panel, with the standard setpoint assigned via the OP71I.

The integrated clock timer enables to assign 8 weekly programmes to clusters at any sequence. Each weekly programme enables to enter four switching times per day (2 x On/2 x Off), that can also be set to be valid for the whole day. In addition, it is possible to set 8 special switching days with up to four switching times (2 x On/2 x Off) per designated switching day.
Holiday periods can be taken into consideration by programming for the entire year. On holidays the unit can be set to operate in "unit off" or economy mode.

The summer / winter time changeover is performed automatically.

The control unit is currently supplied with 7 selectable languages:
- German
- English
- French
- Polish
- Czech
- Hungarian.

The following model is available:
- MATRIX.OP71I in IP54 protection type; colour – light gray (similar to RAL 7035).

Service software MATRIX.PC

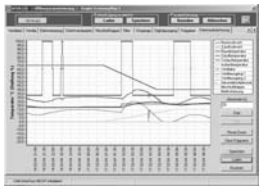

Based on the functions of the MATRIX.PDA service tool, the MATRIX.PC service software provides further comprehensive functions for setting, commissioning and data recording of the FläktGroup MATRIX control system.

The service software can be connected via the service interface, which is integrated in all control panels, controllers, global modules, clock timers and communication modules. Your PC must have a USB port; the enclosed adapter establishes the connection between the PC and the service interface.

The following main functions are also available:

– Online display of module, status and network data
– Recording and saving of temperature curves and switch states of actuators with adjustable sample rate
– Offline settings
– Programming of designated inputs and outputs (controllers, global modules)
– Activation of messaging and network data
– Configuration of controller and control panel functions
– Input of sensor correction factors

PC system requirements:

– PC with 233 MHz processor frequency or higher
– 20 MB available disk space
– Minimum monitor resolution of 800 x 600 pixels
– USB interface for CAN adaptor

The software runs on the following operating systems: Windows 98 Second Edition; Windows 2000; Windows XP

Together with main software on a CD, the operating instructions and interface module for connection to the PC USB port are also included.

Notes

FläktGroup

EXCELLENCE IN SOLUTIONS

FläktGroup is the European market leader for smart and energy efficient Indoor Air and Critical Air solutions to support every application area. We offer our customers innovative technologies, high quality and outstanding performance supported by more than a century of accumulated industry experience. The widest product range in the market, and strong market presence in 65 countries worldwide, guarantee that we are always by your side, ready to deliver Excellence in Solutions

PRODUCT FUNCTIONS BY FLÄKTGROUP

Air Treatment | Air Movement | Air Diffusion | Air Distribution | Air Filtration
Air Management | Air Conditioning & Heating | Controls | Service

*» Learn more on **www.flaktgroup.com***
or contact one of our office